DOCUMENT DATA FORM **Your Name: Nick Carino**

Document Title or Description (max. 254 characters): Circle: Same as cover (or fill in below)

Drawing Book 8, Chapter 7: PATH area, Elev 264 Sections

Include work order no. and floor no. if applicable

Roll # DB03	**Doc. ID (report #, dwg. #):**	
Document Date: 69-70	**Document Author Name:**	**Author Organization:** SHC&R

KEYWORDS – HIGHLIGHT ALL THAT APPLY

Level 1

Bankers Trust	Project 4	WTC 1 - North Tower	Add
Below Grade	Project 5	WTC 2 - South Tower	
Concourse	Project 6	WTC 3 - Marriot Hotel	
Electrical Substation	Project 7	WTC 4 - South Plaza Bldg.	
Liberty Plaza	Project 8	WTC 5 - North Plaza Bldg	
PATH Station	WFC 1 - Oppenhiemer Dow	WTC 6 - Customs House	
PATH Terminal	WFC 2 - Tower B	WTC 7	
Project 1	WFC 3 - American Express	WTC Complex	
Project 2	WFC 4 - Tower D	WTC Plaza	
Project 3			

Level 2

Accident analysis & risk	Fire protection	Misc. Performance Problems	Structural
Architectural	Fire service	News coverage	Tenant alterations
Data request	Landscaping	Police	Tenant Space
Emergency management	Management	Security	Add
Evacuation	Mech./elec.		

Level 3

1993 explosion	Cranes	Frame	Roof	Weight
A/E fitout	Criteria	Frame analysis	Safety	Weld detail
A-242	Dampers	Frequency	Schedule	Weld size
A-36	Debris	Fuel	Sculpture	Welding
A-497	Deck	Furniture layout	Security system	Wind
Aircraft impact	Deflection	Generators	Shear knuckle	Windows
Air cooled condensers	Demolition	Guidelines	Shear test	Yield strength
Analysis	Design	Gypsum board	Shear Stud	Add
Angles	Detailing	Hat truss	Shop drawings	Drawing books
Antenna	Doors	Human comfort	Shortening	
Artifacts	Drawings	HVAC	Slab	
Asbestos	Eastern States Steel	Index	Slurry wall	
Base plate	Egress	Inspection	Smoke control	
Beams	Elevator	Insulation	Smoke test	
Bid documents	Elevator Shaft	Job number	Spandrel beam	
Bid Invitation	Emergency	Joist	Specifications	
Bow tie	communications	L-50	Splices	
Bracing	Equipment	Lighting	Sprinkler	
Bridging truss	Erection marks	Loads	Stability	
Building code	Errors & Omissions	Maintenance	Stairways	
Calculations	Escalator	Marking	Standards	
Carpet	Expansion joint	Mesh reinforcement	Steel	
Ceilings	Exterior columns	Mill inspection	Steel composition	
Certification	Fabrication	Model	Stiffness	
Chillers	Family member	Mullion	Structural review	
Cladding	Field survey	Operations	Surveillance	
Collapse	Fire alarms	Paint	Survey	
Columns	Fireproofing	Partition layout	Survivor	
Communication systems	Fire spread	Partitions	Tenant list	
Composite truss	Fire testing	Photos	Tenant occupancy	
Computer output	Firetower	Pipes	Testing	
Computer program	Flag Pole	Plumbing	Tie	
Concrete	Flammability	Prestressing	Tolerances	
Connections	Floor	Probability, uncertainty	Transfer Girders	
Construction	Floor load	Quality control	Triad	
Contract	Floor slab	Ramp	Truss	
Core beams	Floor system	Reinforcing (strengthening)	Vestibule	
Core columns	Floor trusses	Renovation	Vibration	
Corrosion	Formwork	Repair	Walls	
Cracking	Foundations	Research & Development	Water supply	
	Fracture		Weather	

WTCI-1065-LERA

SKILLING, HELLE, CHRISTIANSEN, ROBERTSON Structural & Civil Engineers

PROJECT	TITLE	DATE
THE WORLD TRADE CENTER	CONCRETE WALL DETAILS, PATH AREA & EL.264 - INDEX	9/ 1/70

REVISIONS

8-JK7- 1.1 INDEX
8-JK7- 1.2 INDEX
8-JK7- 2 NOT USED
8-JK7- 3.1 BUFFER WALLS
8-JK7- 3.2 BUFFER WALLS
8-JK7- 3.3 BUFFER WALLS
8-JK7- 3.4 BUFFER WALLS
8-JK7- 3.5 BUFFER WALLS
8-JK7- 3.6 BUFFER WALLS
8-JK7- 3.7 BUFFER WALLS
8-JK7- 3.8 BUFFER WALLS
8-JK7- 3.9 BUFFER WALLS
8-JK7- 3.10 BUFFER WALLS
8-JK7- 3.11 BUFFER WALLS
8-JK7- 3.12 BUFFER WALLS
8-JK7- 4.1 PATH PLATFORMS
8-JK7- 4.2 PATH PLATFORMS
8-JK7- 4.3 PATH PLATFORMS
8-JK7- 4.4 PATH PLATFORMS
8-JK7- 5.1 PATH SECTIONS
8-JK7- 5.2 PATH SECTIONS
8-JK7- 5.3 PATH SECTIONS
8-JK7- 5.4 PATH SECTIONS
8-JK7- 5.5 PATH SECTIONS
8-JK7- 5.6 PATH SECTIONS
8-JK7- 5.7 PATH SECTIONS
8-JK7- 5.8 PATH SECTIONS
8-JK7- 5.9 PATH SECTIONS
8-JK7- 5.10 PATH SECTIONS
8-JK7- 5.11 PATH SECTIONS
8-JK7- 5.12 PATH SECTIONS
8-JK7- 5.13 PATH SECTIONS
8-JK7- 5.14 PATH SECTIONS
8-JK7- 5.15 PATH SECTIONS
8-JK7- 5.16 PATH SECTIONS
8-JK7- 5.17 PATH SECTIONS
8-JK7- 5.18 PATH SECTIONS
8-JK7- 5.19 PATH SECTIONS
8-JK7- 6.1 VOID
8-JK7- 6.2 VOID
8-JK7- 6.3 PATH SECTIONS
8-JK7- 6.4 NOT USED
8-JK7- 6.5 PATH SECTIONS
8-JK7- 6.6 NOT USED
8-JK7- 6.7 NOT USED
8-JK7- 6.8 NOT USED

SKILLING, HELLE, CHRISTIANSEN, ROBERTSON — Structural & Civil Engineers

PROJECT	TITLE	DATE
THE WORLD TRADE CENTER	CONCRETE WALL DETAILS, PATH AREA & EL.264 - INDEX	9/ 1/70

REVISIONS

SUPERSEDES 8-JK7-1

8-JK7-	6.9	PATH SECTIONS (CONTINUED)
8-JK7-	6.10	PATH SECTIONS
8-JK7-	6.11	PATH SECTIONS
8-JK7-	6.12	PATH SECTIONS
8-JK7-	6.13	PATH SECTIONS
8-JK7-	6.14	PATH SECTIONS
8-JK7-	6.15	PATH SECTIONS
8-JK7-	6.16	PATH SECTIONS
8-JK7-	6.17	PATH SECTIONS
8-JK7-	6.18	PATH SECTIONS
8-JK7-	6.19	PATH SECTIONS
8-JK7-	7.1	VOID
8-JK7-	7.2	VOID
8-JK7-	7.3	VOID
8-JK7-	7.4	VOID
8-JK7-	7.5	VOID
8-JK7-	7.6	ELEVATION 264 - SECTIONS
8-JK7-	7.7	ELEVATION 264 - SECTIONS
8-JK7-	7.8	ELEVATION 264 - SECTIONS
8-JK7-	7.9	ELEVATION 264 - SECTIONS
8-JK7-	7.10	ELEVATION 264 - SECTIONS
8-JK7-	7.11	ELEVATION 264 - SECTIONS
8-JK7-	7.12	ELEVATION 264 - SECTIONS
8-JK7-	7.13	ELEVATION 264 - SECTIONS
8-JK7-	7.14	ELEVATION 264 - SECTIONS
8-JK7-	7.15	ELEVATION 264 - SECTIONS
8-JK7-	8.1	ELEVATION 264 - SECTIONS
8-JK7-	8.2	ELEVATION 264 - SECTIONS
8-JK7-	8.3	ELEVATION 264 - SECTIONS
8-JK7-	8.4	ELEVATION 264 - SECTIONS
8-JK7-	8.5	ELEVATION 264 - SECTIONS
8-JK7-	8.6	ELEVATION 264 - SECTIONS
8-JK7-	8.7	ELEVATION 264 - SECTIONS
8-JK7-	8.8	ELEVATION 264 - SECTIONS
8-JK7-	8.9	ELEVATION 264 - SECTIONS
8-JK7-	9	NOT USED
8-JK7-	10.1	ELEVATOR C-9 - SECTIONS
8-JK7-	10.2	ELEVATOR C-9 - SECTIONS
8-JK7-	10.3	ELEVATOR C-9 - SECTIONS
8-JK7-	10.4	ELEVATOR C-9 - SECTIONS
8-JK7-	11.1	ELEVATOR C-10 - SECTIONS
8-JK7-	11.2	ELEVATOR C-10 - SECTIONS
8-JK7-	11.3	ELEVATOR C-10 - SECTIONS
8-JK7-	12.1	HOTEL FREIGHT ELEVATOR (H-10) WALLS

1065-L

SKILLING, HELLE, CHRISTIANSEN, ROBERTSON — Structural & Civil Engineers

PROJECT THE WORLD TRADE CENTER | TITLE BUFFER WALL DETAILS | DATE 5-1-68

REVISIONS

7-9-68

10-24-69 GEN. REV.

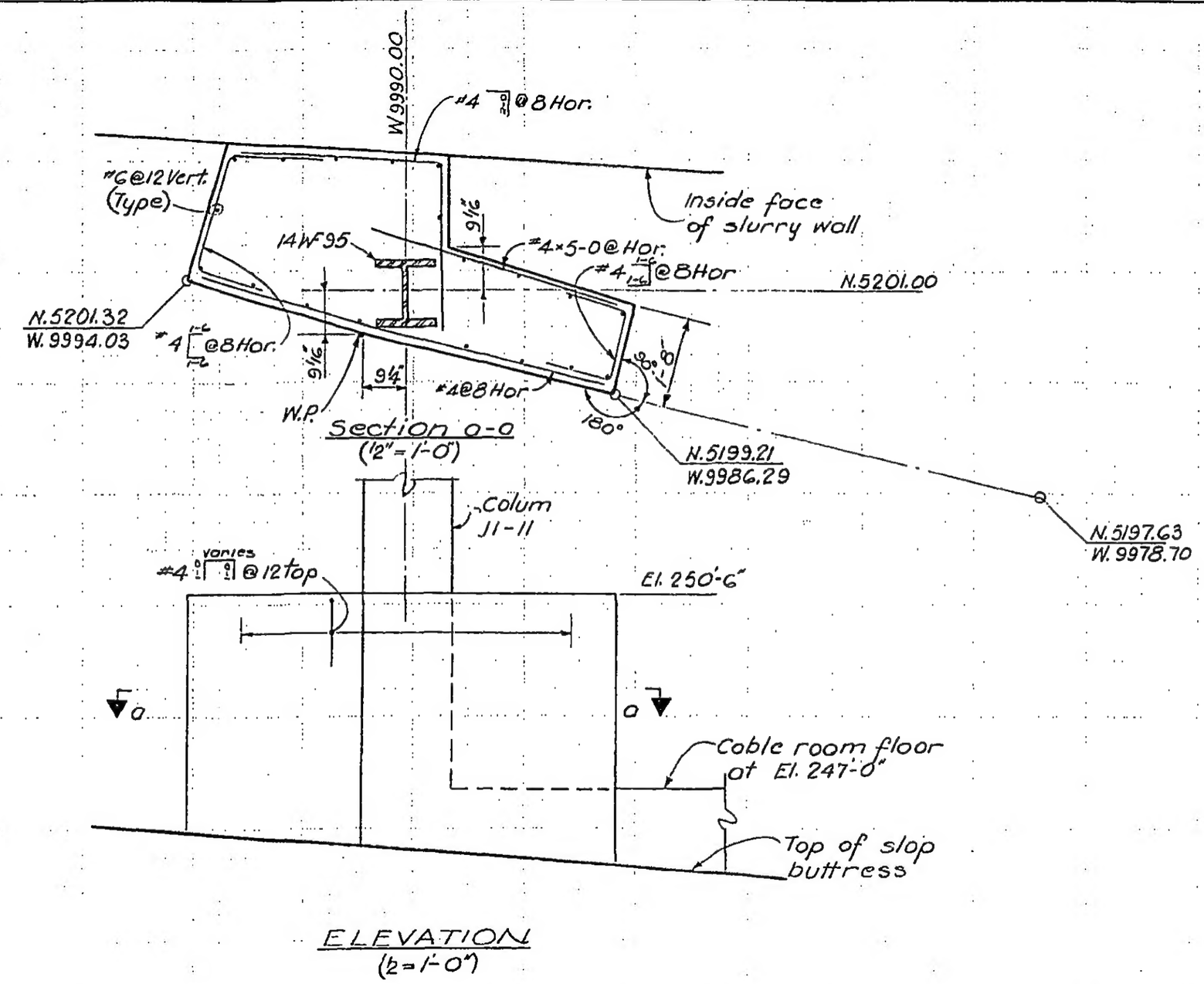

ELEVATION
(½=1'-0")

LICENSED PROFESSIONAL ENGINEER — LESLIE E. ROBERTSON — No. 34360 — UNIVERSITY OF THE STATE OF NEW YORK

DESIGNED

DRAWN D.C. Huggins

REVIEWED E.L.

8-JK7-3.1

SKILLING - HELLE - CHRISTIANSEN - ROBERTSON Structural & Civil Engineers

PROJECT THE WORLD TRADE CENTER | TITLE BUFFER WALL DETAILS | DATE 5-1-68

REVISIONS

7-9-68

11-7-69 GEN. REV.

12-12-69

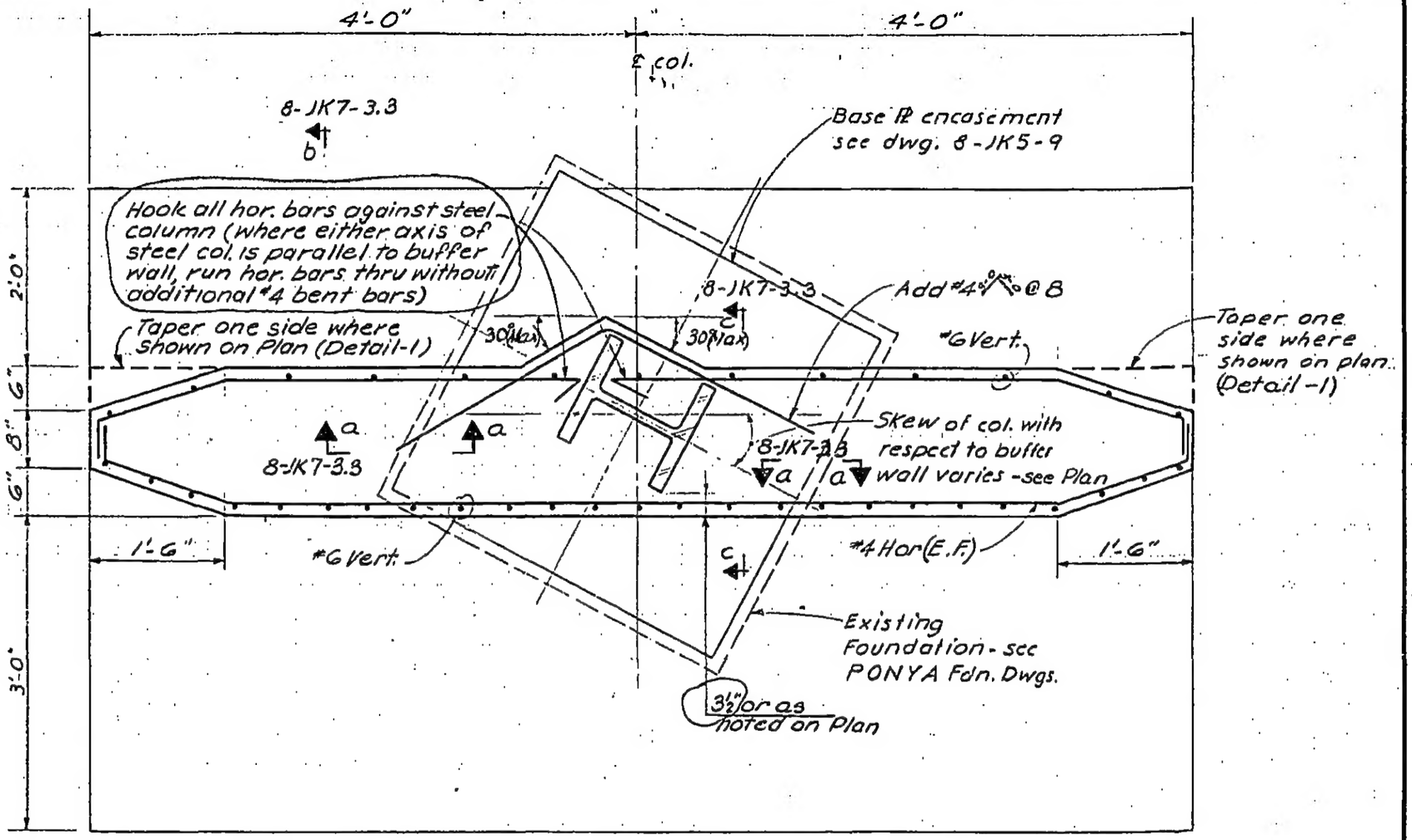

Detail-1

Detail-2

Plan

Notes:

1. All concrete to be f'c = 3000psi

LICENSED PROFESSIONAL ENGINEER
LESLIE E. ROBERTSON
No. 34360
UNIVERSITY OF THE STATE OF NEW YORK

DRAWN S.C.

REVIEWED E.L.

8-JK7-3.2

SKILLING - HELLE - CHRISTIANSEN - ROBERTSON Structural & Civil Engineers

PROJECT THE WORLD TRADE CENTER | TITLE BUFFER WALL DETAILS | DATE 11-7-69

REVISIONS

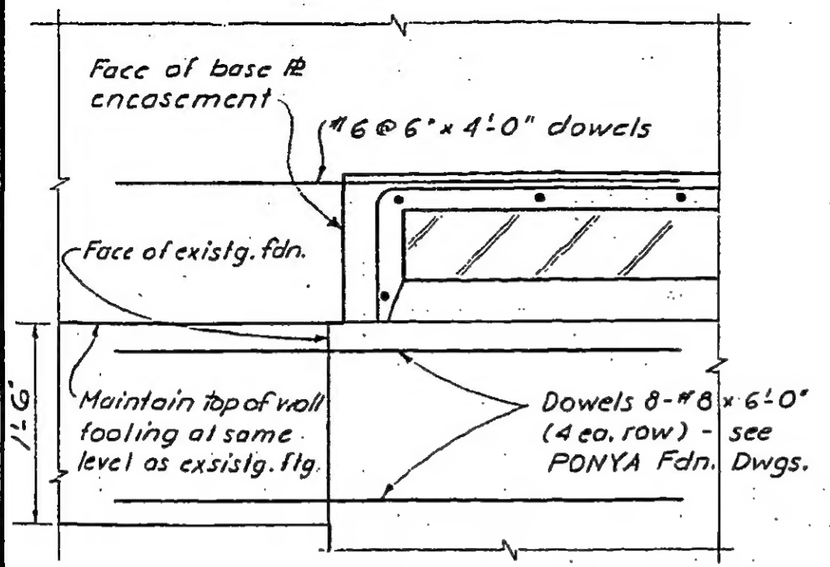

Section a-a

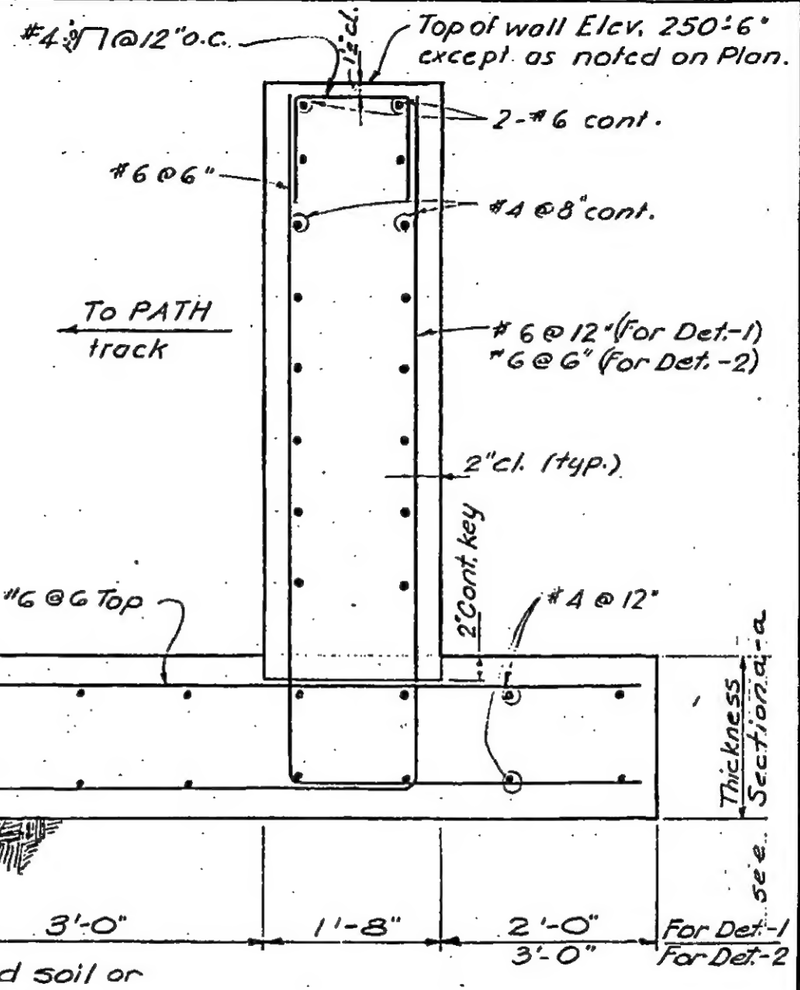

Section b-b

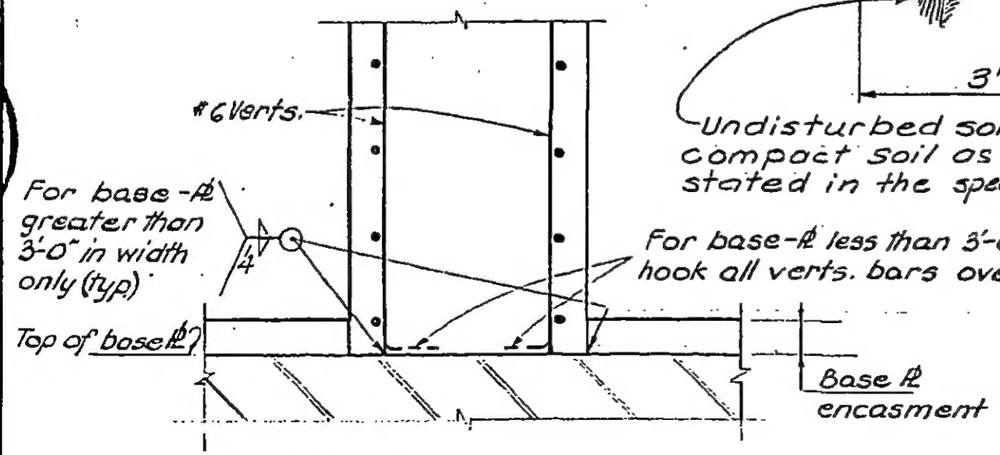

Section c-c

LICENSED PROFESSIONAL ENGINEER
LESLIE E. ROBERTSON
No. 34360
UNIVERSITY OF THE STATE OF NEW YORK

DRAWN S.C.

REVIEWED E.L.

8-JK7-3.3

SKILLING - HELLE - CHRISTIANSEN - ROBERTSON Structural & Civil Engineers

PROJECT THE WORLD TRADE CENTER | TITLE BUFFER WALL DETAILS | DATE 11-7-69

REVISIONS

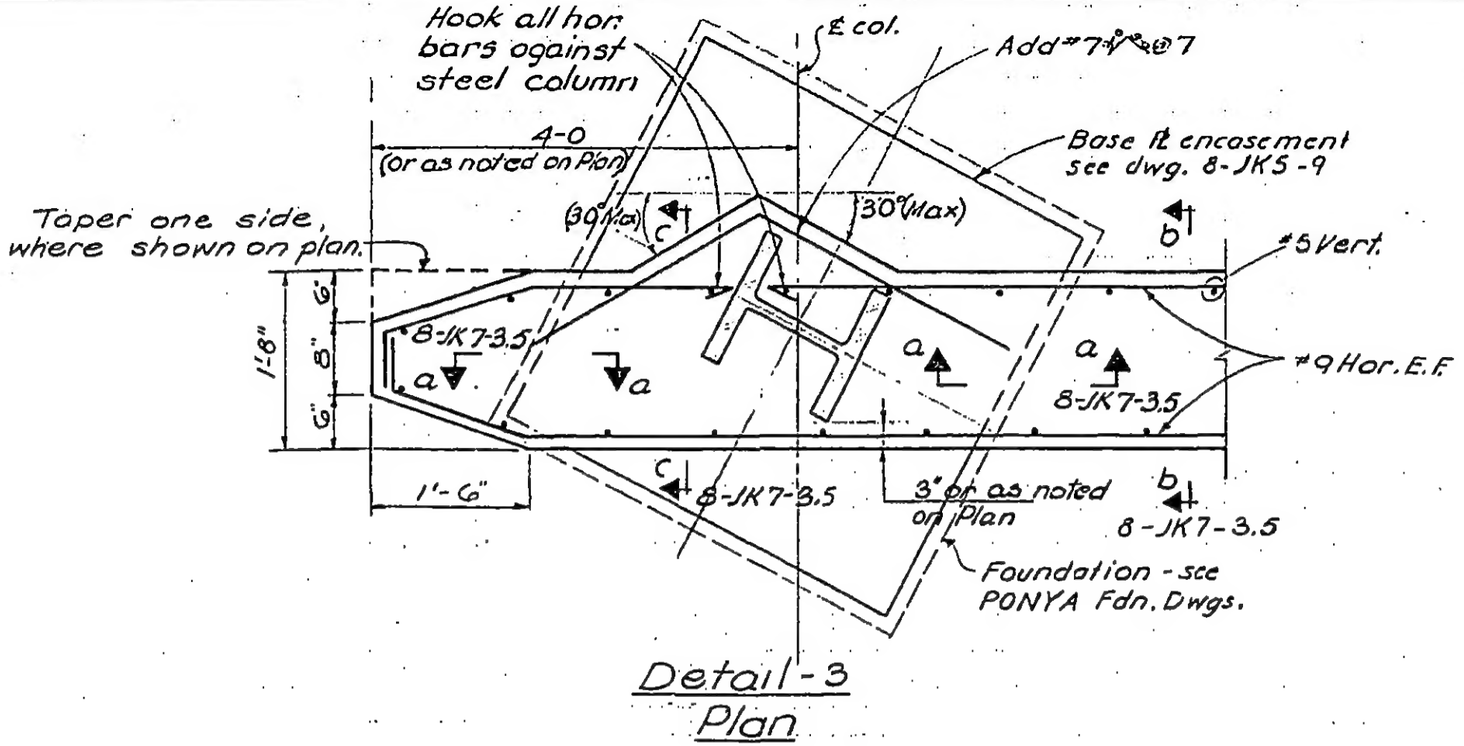

Detail-3
Plan

LICENSED PROFESSIONAL ENGINEER
LESLIE E. ROBERTSON
No. 34360
STATE OF NEW YORK

DRAWN
S.C.

REVIEWED
E.L.

8-JK7-3.4

SKILLING - HELLE - CHRISTIANSEN - ROBERTSON Structural & Civil Engineers

PROJECT THE WORLD TRADE CENTER | TITLE BUFFER WALL DETAIL | DATE 11-7-69

REVISIONS

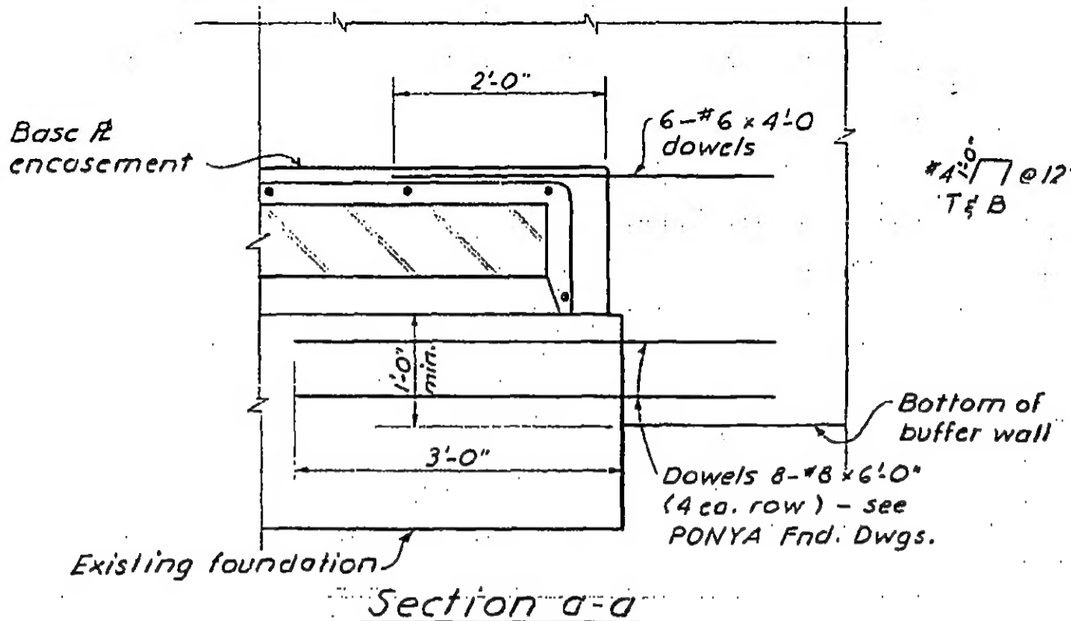

Section a-a

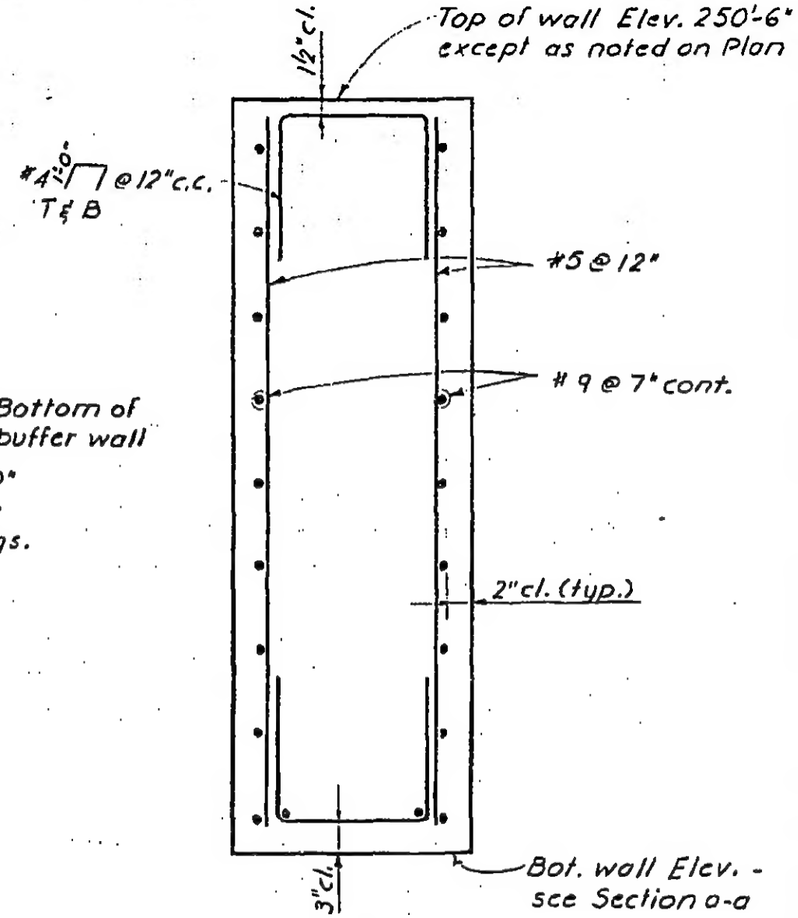

Section b-b

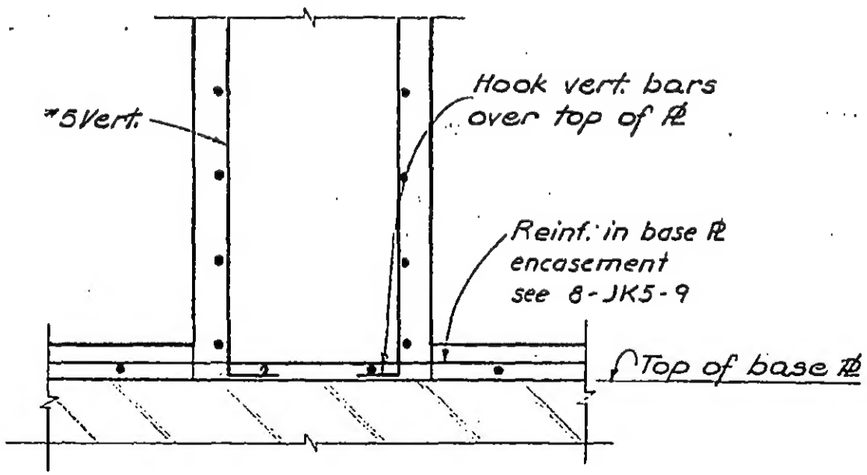

Section c-c

LICENSED PROFESSIONAL ENGINEER
LESLIE E. ROBERTSON
No. 34360
UNIVERSITY OF THE STATE OF NEW YORK

DRAWN S.C.

REVIEWED E.L.

8-JK7-3.5

SKILLING, HELLE, CHRISTIANSEN, ROBERTSON — Structural & Civil Engineers

PROJECT: THE WORLD TRADE CENTER | TITLE: BUFFER WALLS DETAILS | DATE: 11-7-69

REVISIONS

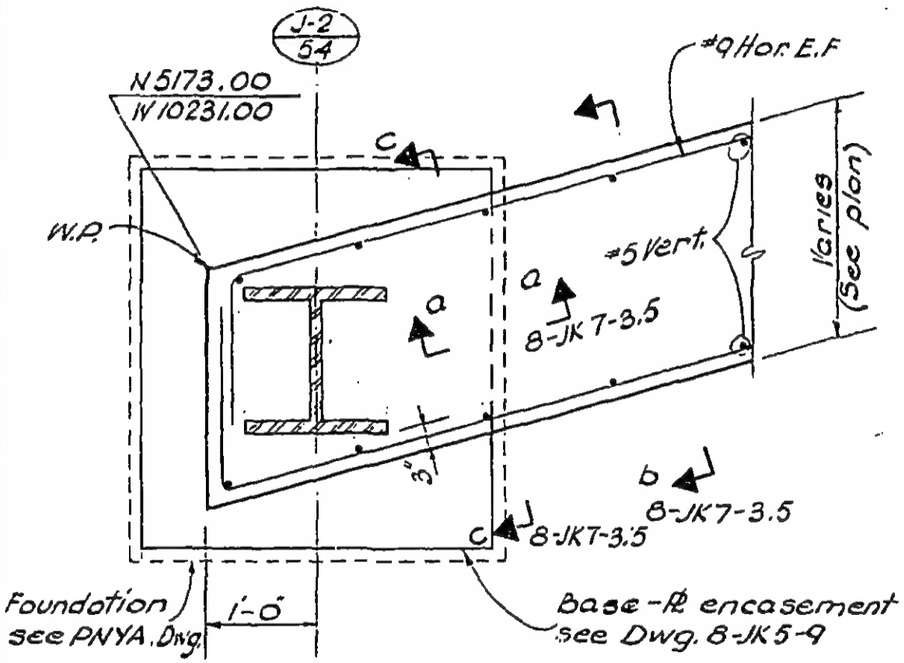

Detail-4

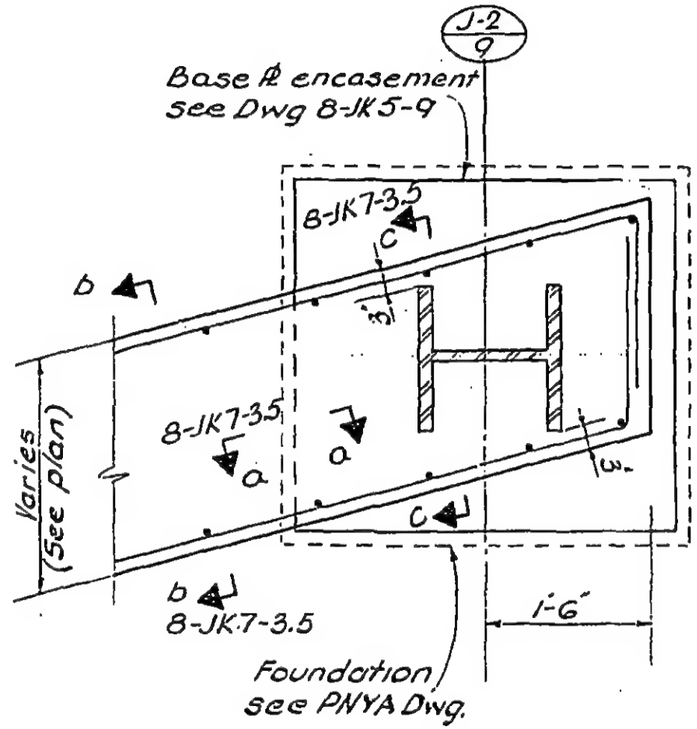

Detail-5

LICENSED PROFESSIONAL ENGINEER
LESLIE E. ROBERTSON
No. 34360
UNIVERSITY OF THE STATE OF NEW YORK

DESIGNED

DRAWN
D. Huggins

REVIEWED
E.L.

8-JK 7-3.6

SKILLING, HELLE, CHRISTIANSEN, ROBERTSON — Structural & Civil Engineers

PROJECT THE WORLD TRADE CENTER | TITLE BUFFER WALL DETAILS | DATE 12-10-69

REVISIONS

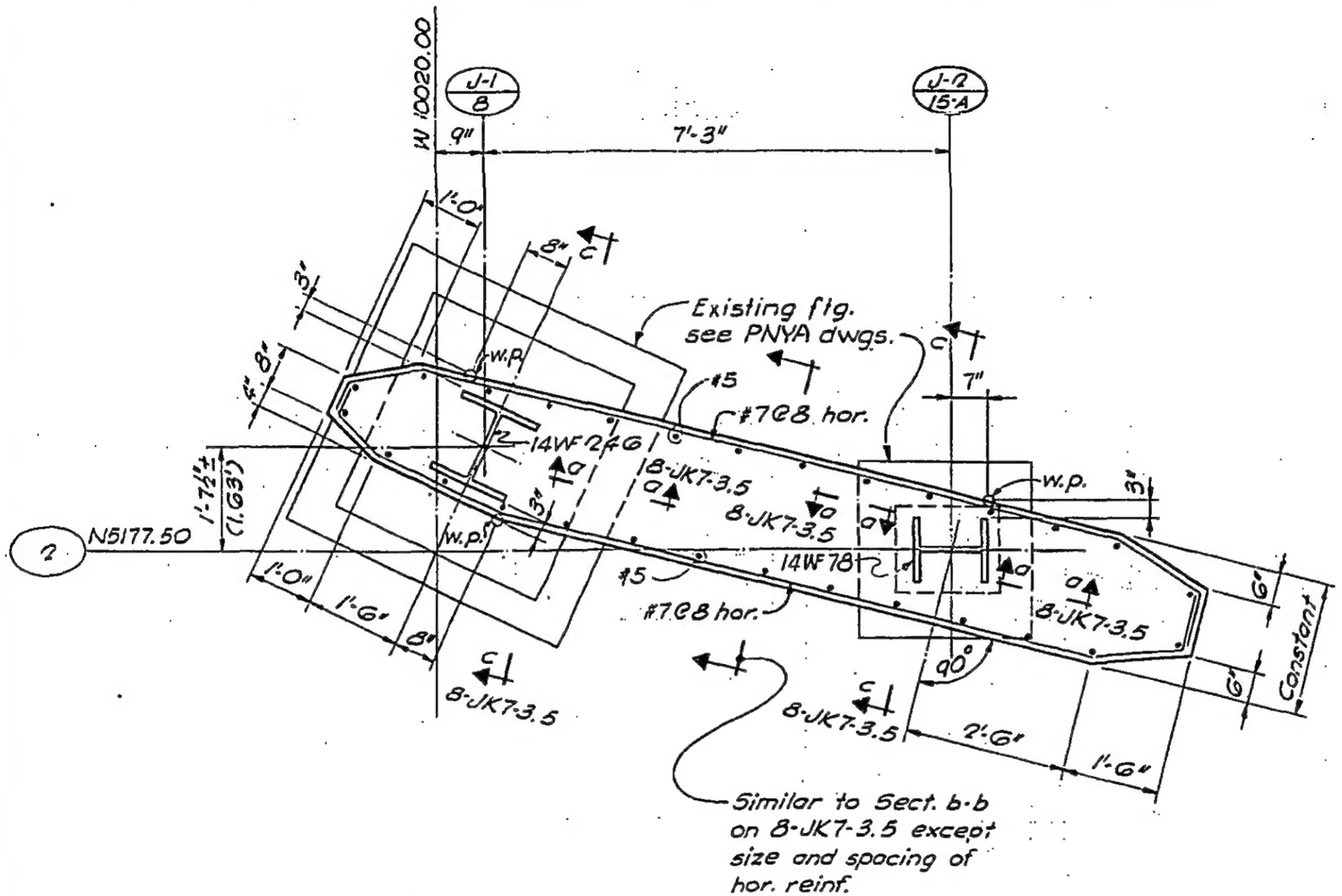

DETAIL 6

(½" = 1'-0")

LICENSED PROFESSIONAL ENGINEER
LESLIE E. ROBERTSON
No 34360
UNIVERSITY OF THE STATE OF NEW YORK

DESIGNED

DRAWN G.K.

REVIEWED E.L.

8-JK7-3.7

SKILLING, HELLE, CHRISTIANSEN, ROBERTSON — Structural & Civil Engineers

PROJECT THE WORLD TRADE CENTER | TITLE BUFFER WALL DETAILS | DATE 12-10-69

REVISIONS

1-8-70

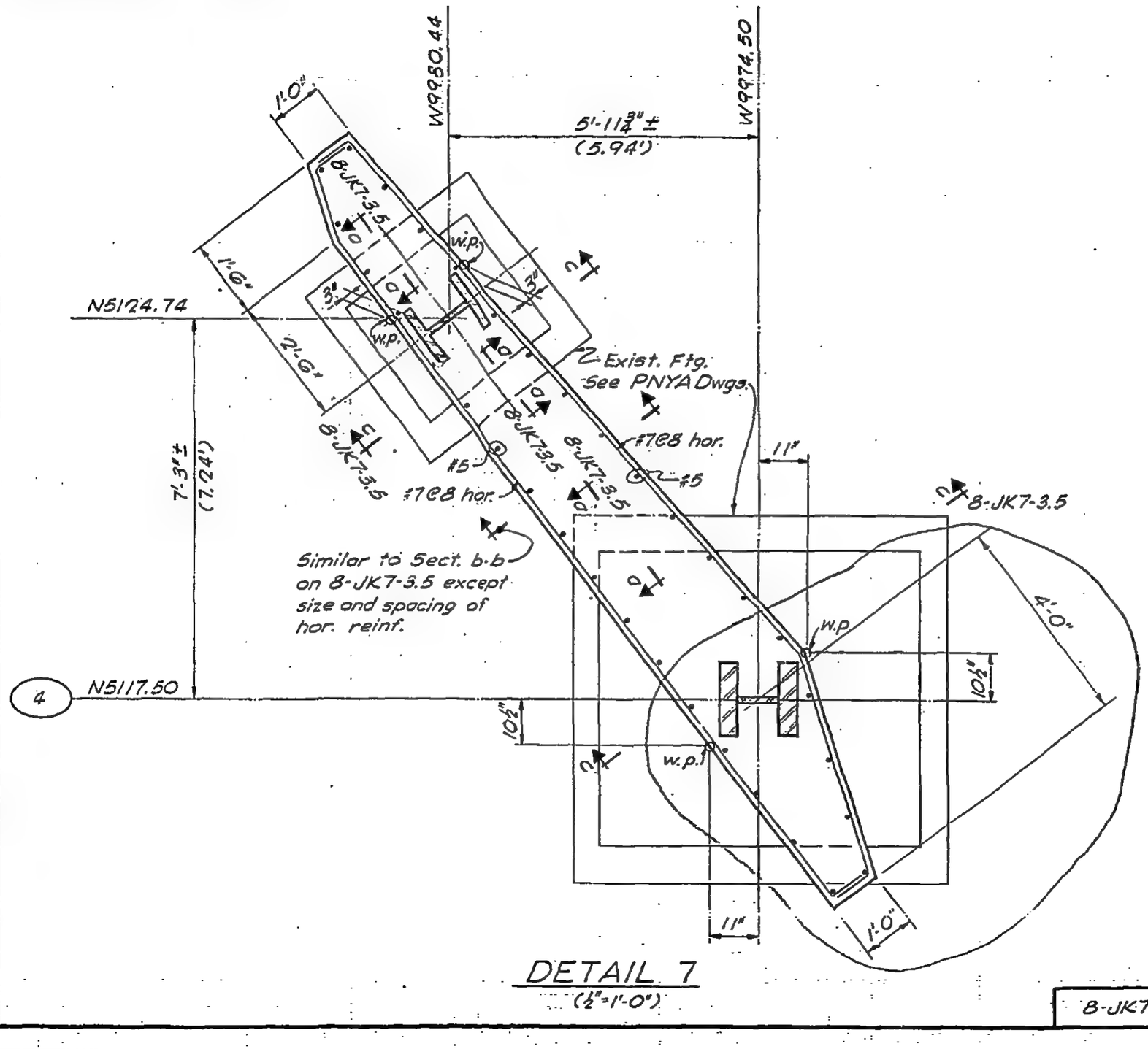

DETAIL 7
(½"=1'-0")

8-JK7-3.8

LICENSED PROFESSIONAL ENGINEER
LESLIE E. ROBERTSON
No 34360
UNIVERSITY OF THE STATE OF NEW YORK

DESIGNED

DRAWN G.K.

REVIEWED E.L.

SKILLING, HELLE, CHRISTIANSEN, ROBERTSON — Structural & Civil Engineers

PROJECT THE WORLD TRADE CENTER | TITLE BUFFER WALL DETAILS | DATE 1-30-70

REVISIONS

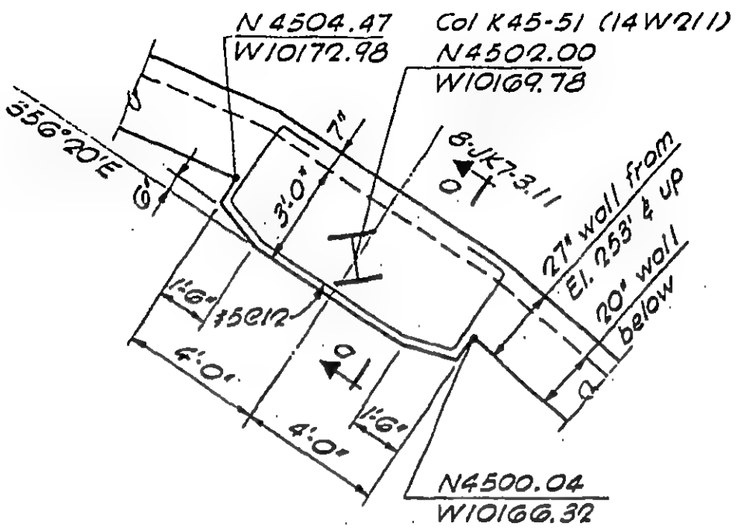

DETAIL 8

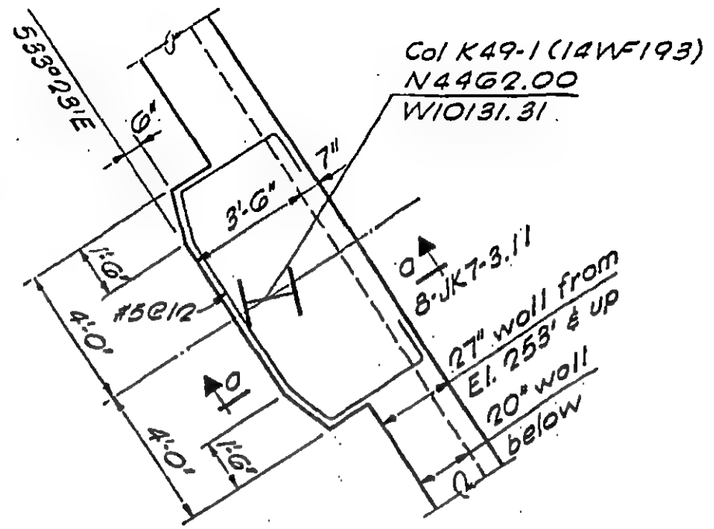

DETAIL 9

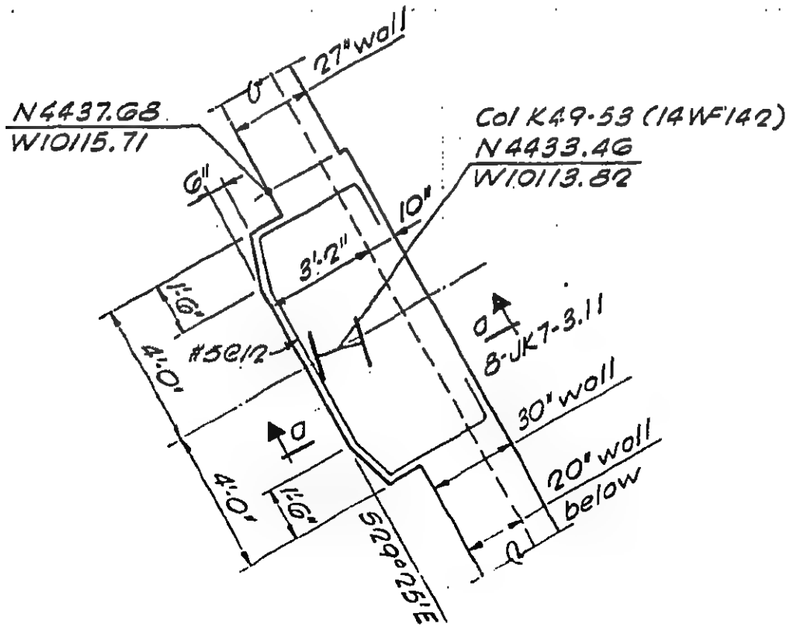

DETAIL 10

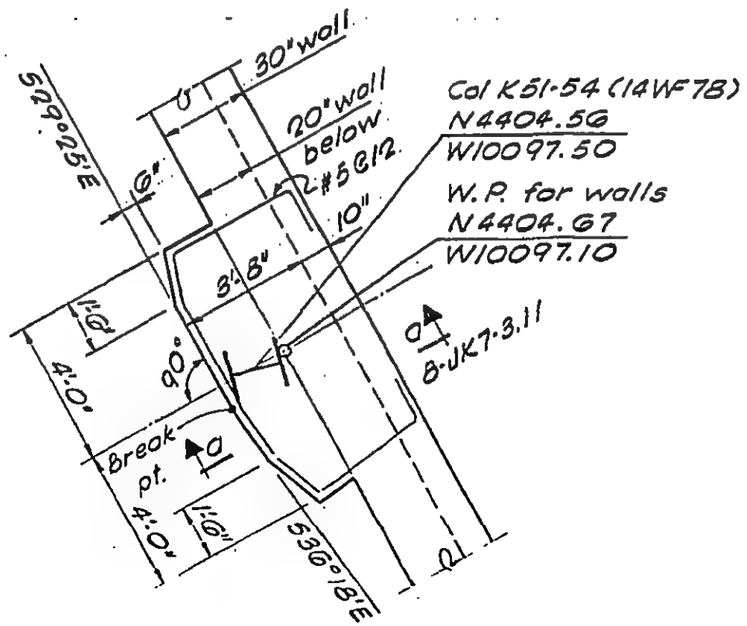

DETAIL 11

(4" = 1'-0")

8-JK7-3.9

LICENSED PROFESSIONAL ENGINEER LESLIE E. ROBERTSON No 34360 UNIVERSITY OF THE STATE OF NEW YORK

DESIGNED

DRAWN G.K.

REVIEWED E.L.

SKILLING, HELLE, CHRISTIANSEN, ROBERTSON — Structural & Civil Engineers

PROJECT THE WORLD TRADE CENTER | TITLE BUFFER WALL DETAILS | DATE 1-30-70

REVISIONS

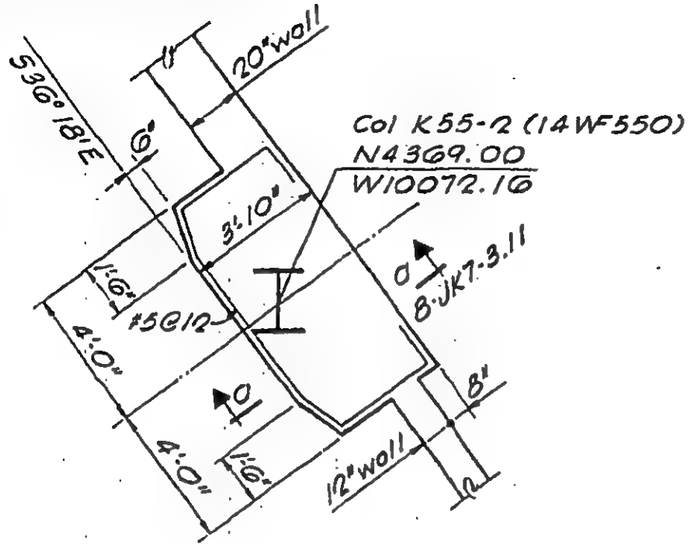

DETAIL 12

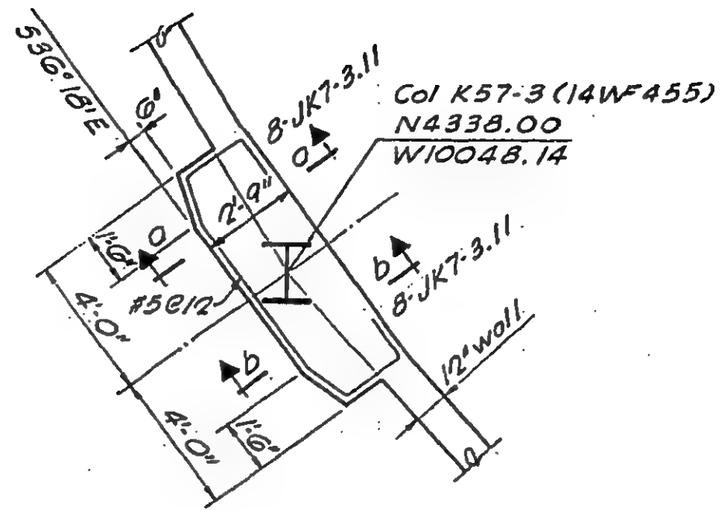

DETAIL 13

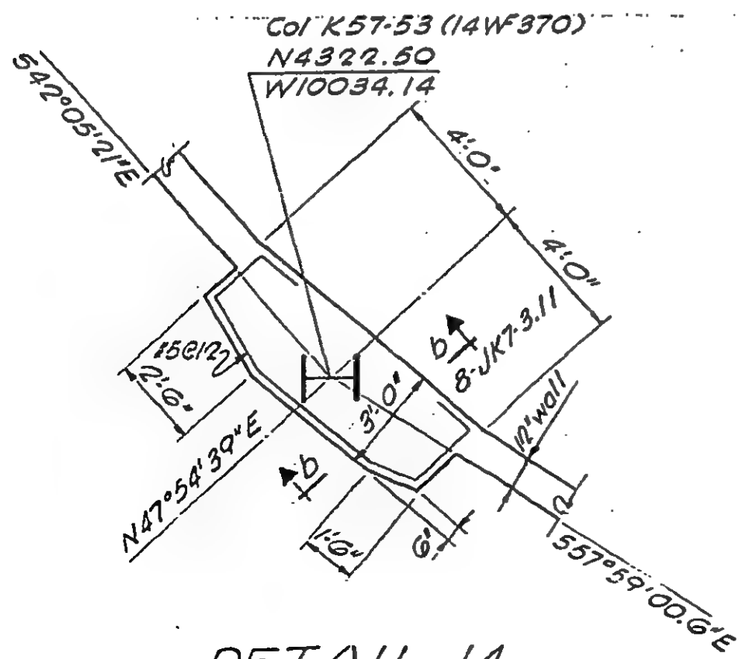

DETAIL 14

LICENSED PROFESSIONAL ENGINEER — LESLIE E. ROBERTSON — No 34360 — UNIVERSITY OF THE STATE OF NEW YORK

DESIGNED

DRAWN G.K

REVIEWED E.L.

(1/4" = 1'-0")

8-JK7-3.10

SKILLING, HELLE, CHRISTIANSEN, ROBERTSON — Structural & Civil Engineers

PROJECT: THE WORLD TRADE CENTER | TITLE: BUFFER WALL DETAILS | DATE: 1-30-70

REVISIONS

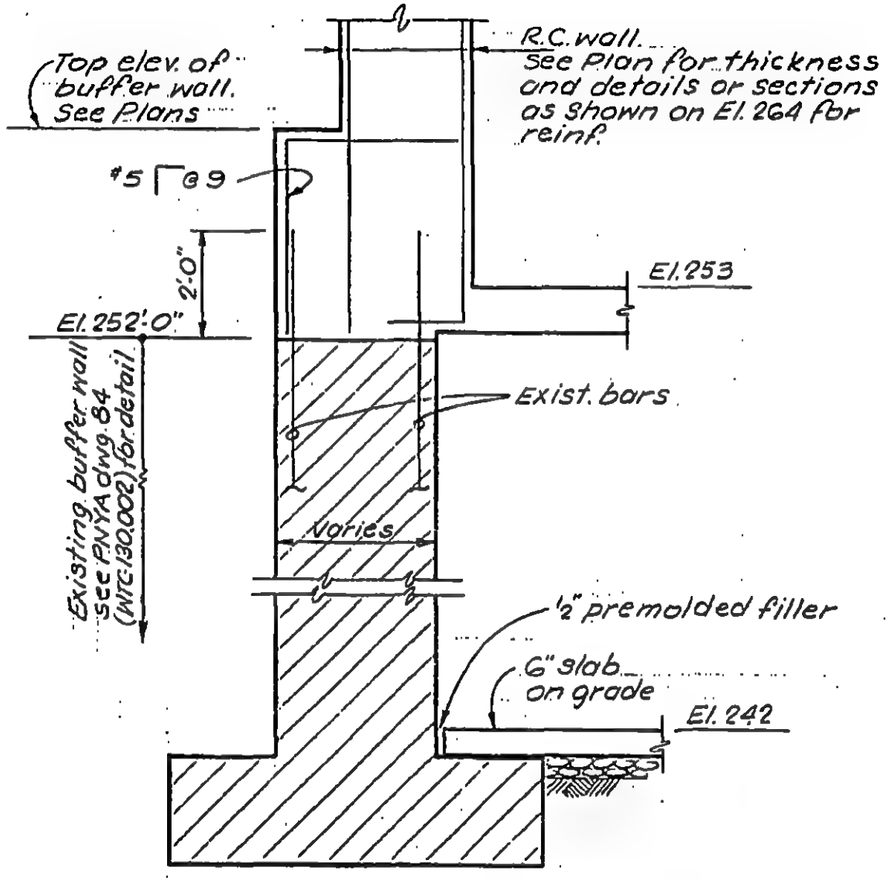

Section a-a
(3/8" = 1'-0")

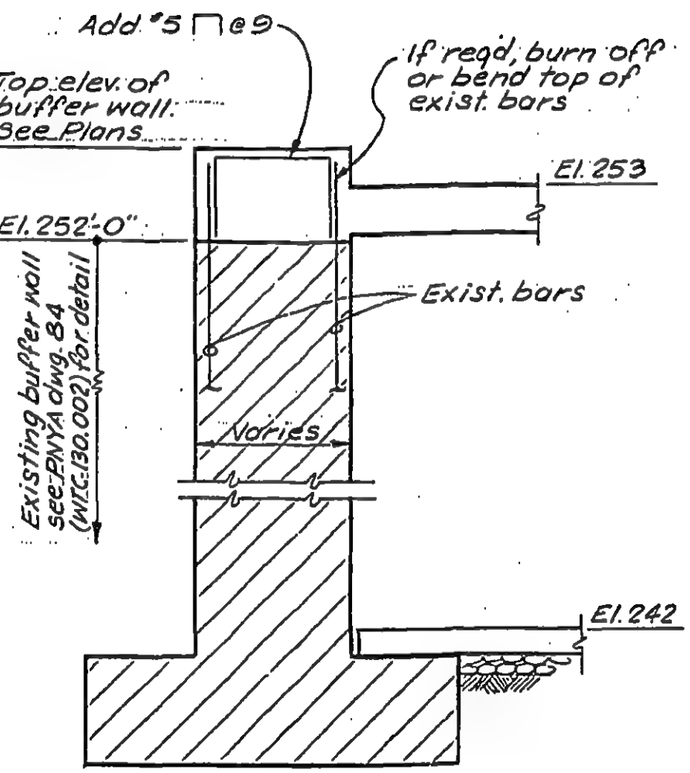

Section b-b
(3/8" = 1'-0")

LICENSED PROFESSIONAL ENGINEER — LESLIE E. ROBERTSON — No 34360 — UNIVERSITY OF THE STATE OF NEW YORK

DESIGNED

DRAWN: S.C.

REVIEWED: E.L.

8-JK7-3.11

SKILLING, HELLE, CHRISTIANSEN, ROBERTSON — Structural & Civil Engineers

PROJECT: THE WORLD TRADE CENTER | TITLE: BUFFER WALL DETAILS | DATE: 3-25-70

REVISIONS

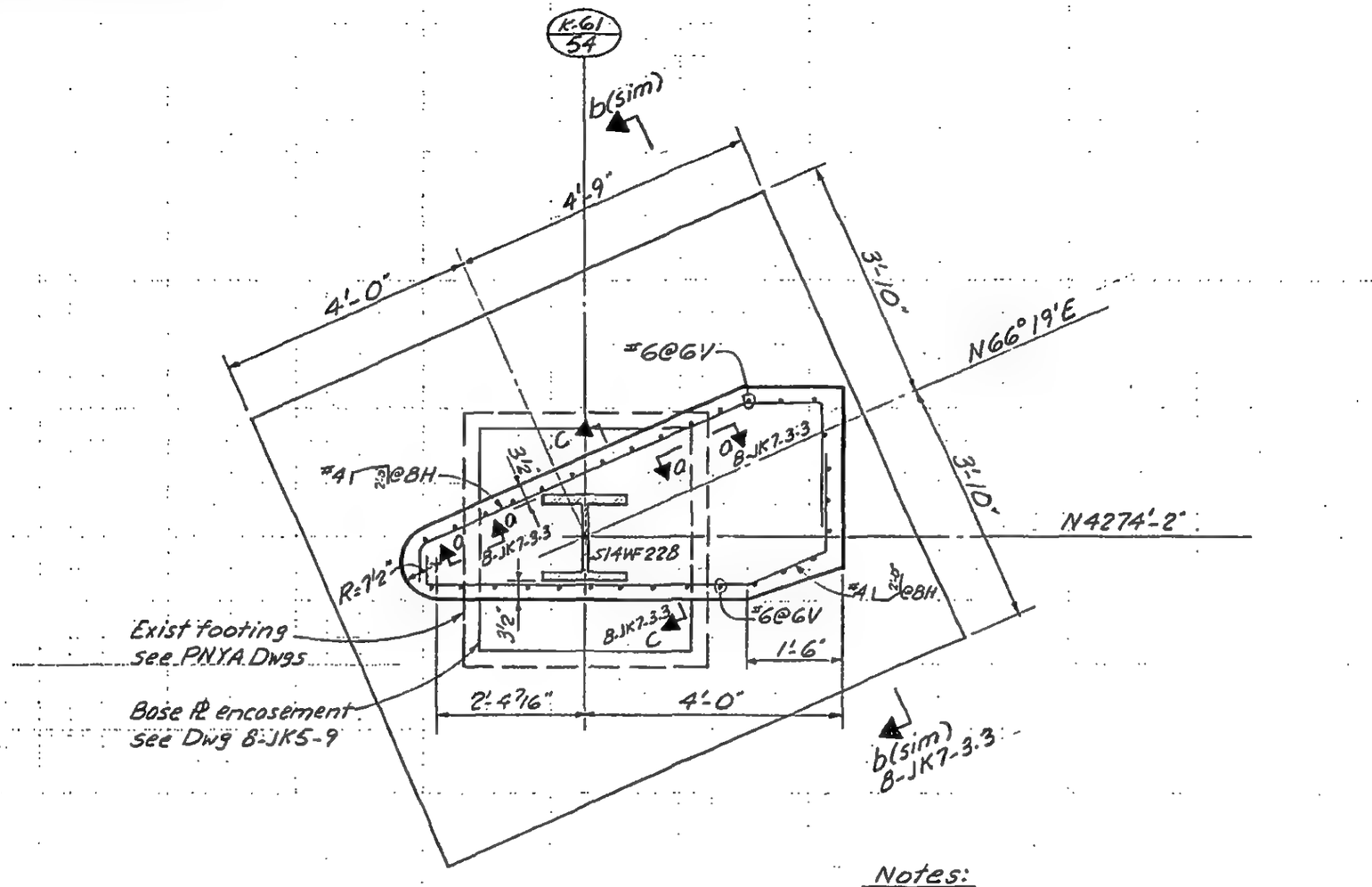

Notes:

1. All concrete to be f'c = 3000 psi.

DETAIL – 15

(1"=1'-0")

LICENSED PROFESSIONAL ENGINEER — LESLIE E. ROBERTSON — No. 34360 — UNIVERSITY OF THE STATE OF NEW YORK

DESIGNED

DRAWN A.F.

REVIEWED E.L.

8-JK7-3.12

SKILLING, HELLE, CHRISTIANSEN, ROBERTSON — Structural & Civil Engineers

PROJECT THE WORLD TRADE CENTER | TITLE PATH PLATFORM 'A' | DATE 12-10-69

REVISIONS
1-16-70
2-10-70
3-4-70
3-12-70

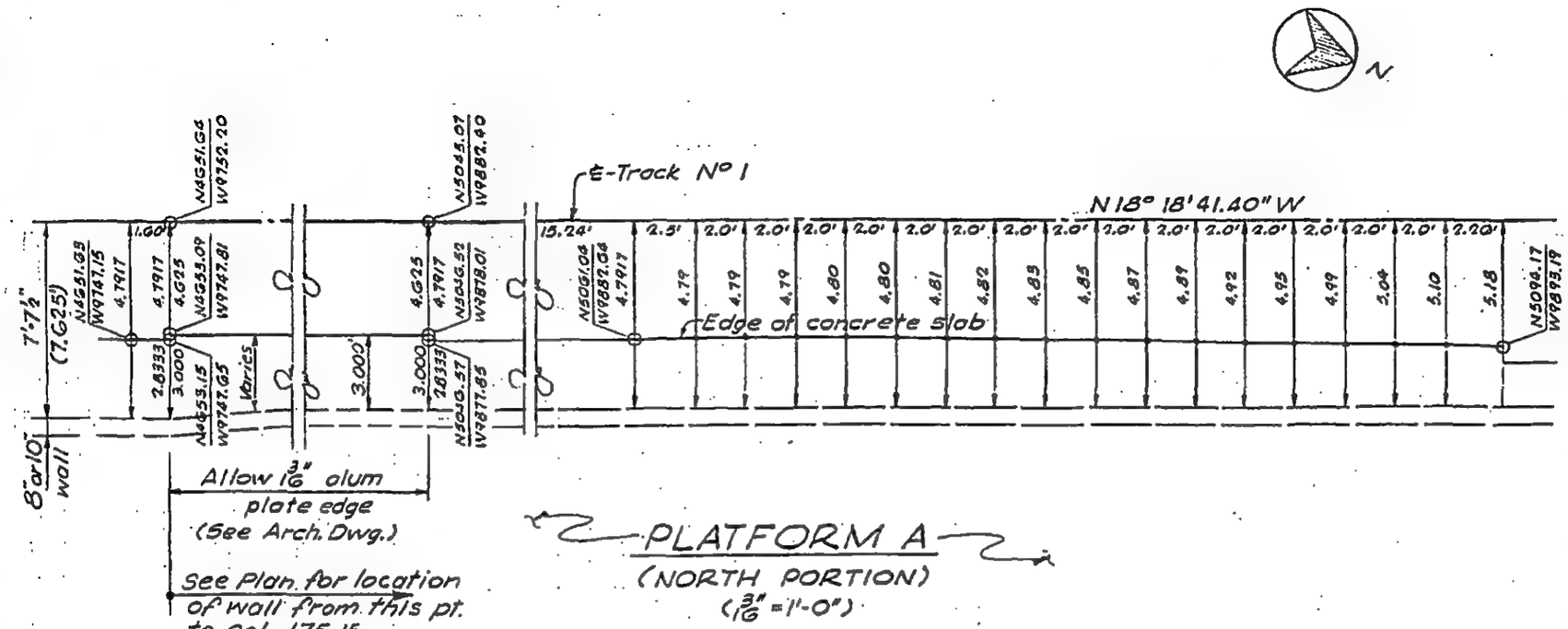

PLATFORM A
(NORTH PORTION)
(3/16" = 1'-0")

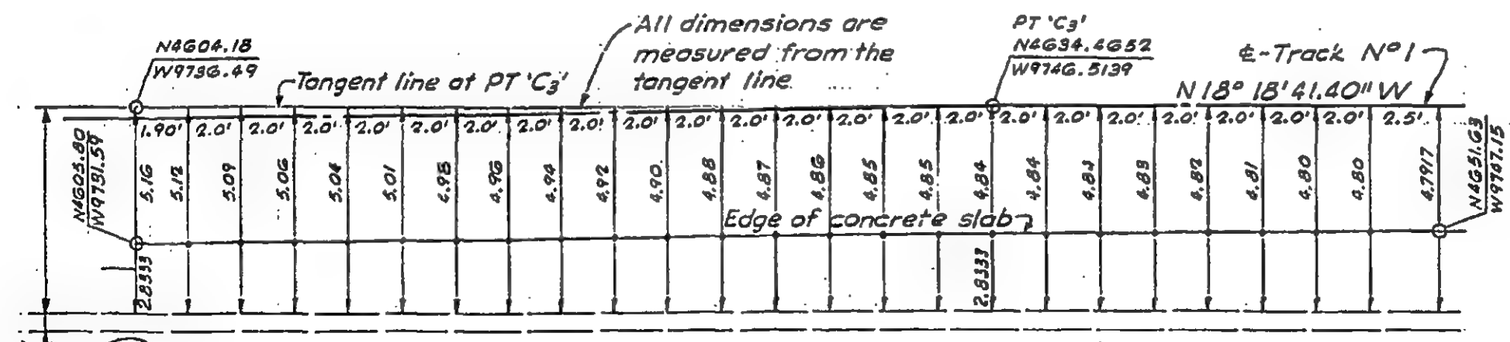

PLATFORM A
(SOUTH PORTION)
(3/16" = 1'-0")

LICENSED PROFESSIONAL ENGINEER — LESLIE E. ROBERTSON — No. 34360 — UNIVERSITY OF THE STATE OF NEW YORK

DESIGNED
DRAWN G.K.
REVIEWED E.L.

REF. DWG. HM 224-68 (3-12-69)

8-JK7-4.1

SKILLING, HELLE, CHRISTIANSEN, ROBERTSON — Structural & Civil Engineers

PROJECT THE WORLD TRADE CENTER | TITLE PATH PLATFORM 'B' | DATE 12-10-69

REVISIONS

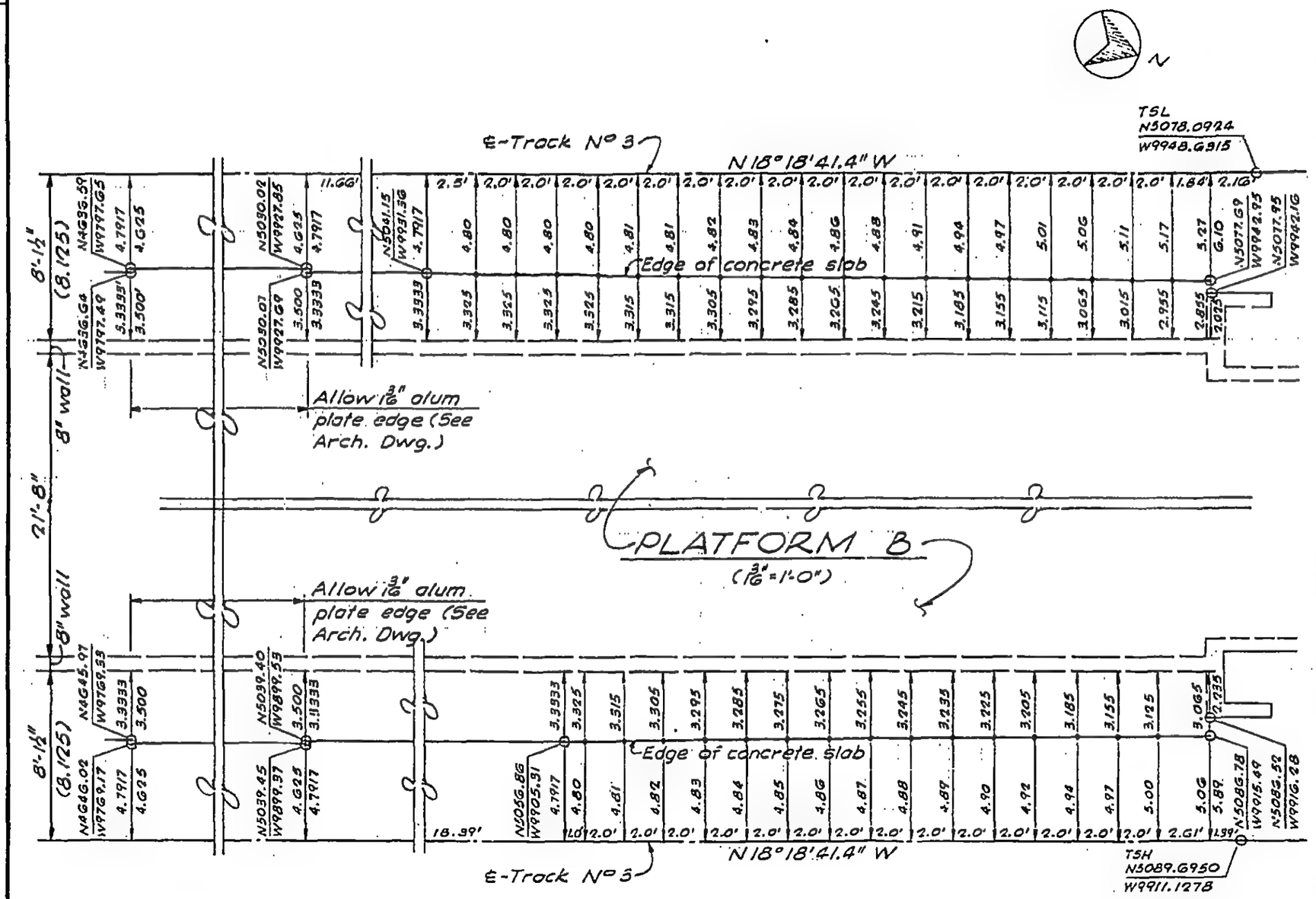

LICENSED PROFESSIONAL ENGINEER — LESLIE E. ROBERTSON — No. 34360 — UNIVERSITY OF THE STATE OF NEW YORK

DESIGNED

DRAWN G.K.

REVIEWED E.L.

Ref. Dwg. HM 224-68 (3-12-69)

8-JK7-4.2

SKILLING, HELLE, CHRISTIANSEN, ROBERTSON — Structural & Civil Engineers

PROJECT THE WORLD TRADE CENTER | TITLE PATH PLATFORM 'C' NORTH PORTION | DATE 12-10-69

REVISIONS

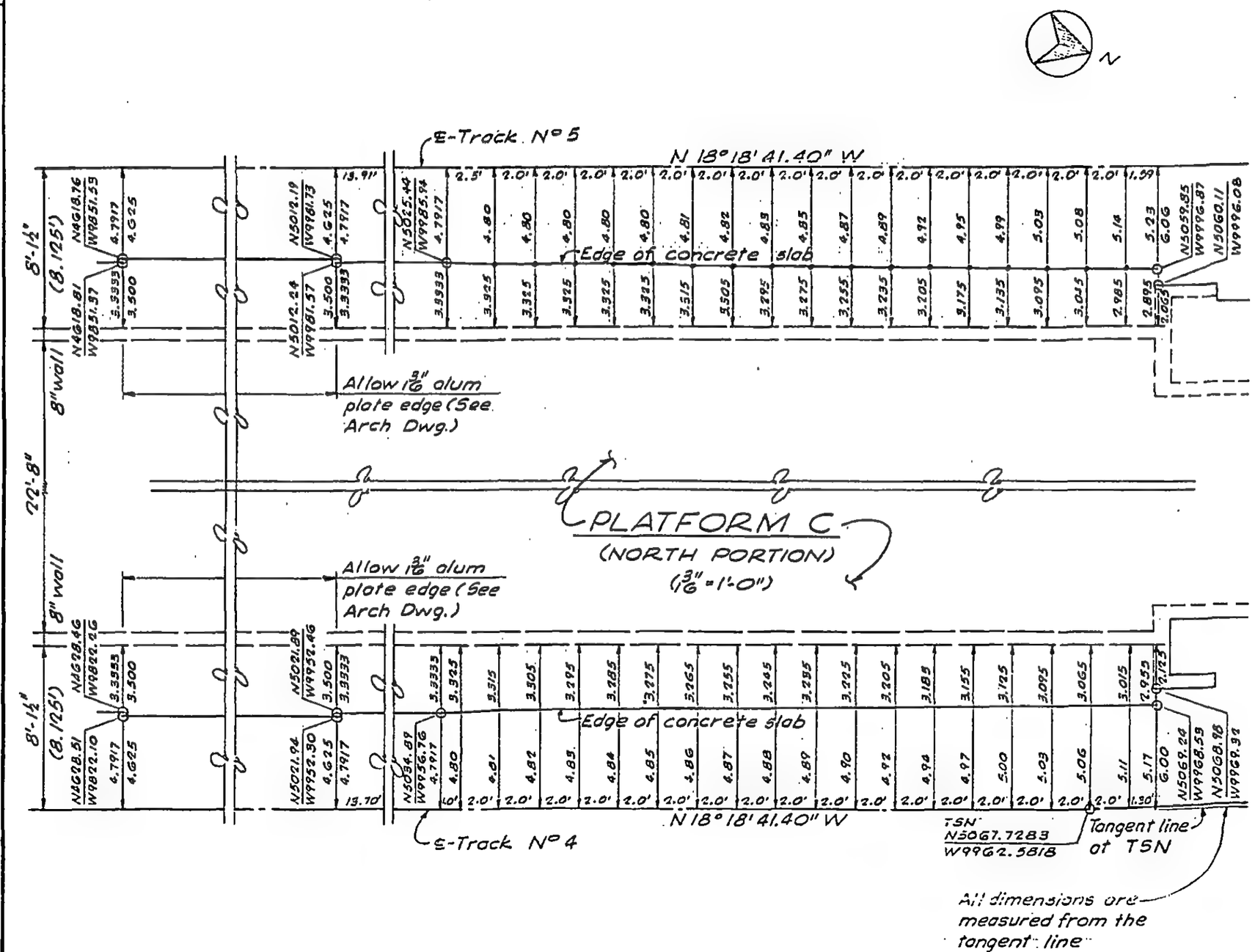

LICENSED PROFESSIONAL ENGINEER — LESLIE E. ROBERTSON — No. 34360 — UNIVERSITY OF THE STATE OF NEW YORK

DESIGNED

DRAWN G. K.

REVIEWED E. L.

Ref. Dwg. HM 224-68 (3-12-69)

8-JK7-4.3

SKILLING, HELLE, CHRISTIANSEN, ROBERTSON — Structural & Civil Engineers

PROJECT THE WORLD TRADE CENTER | TITLE PATH PLATFORM 'C' SOUTH PORTION | DATE 12-10-69

REVISIONS

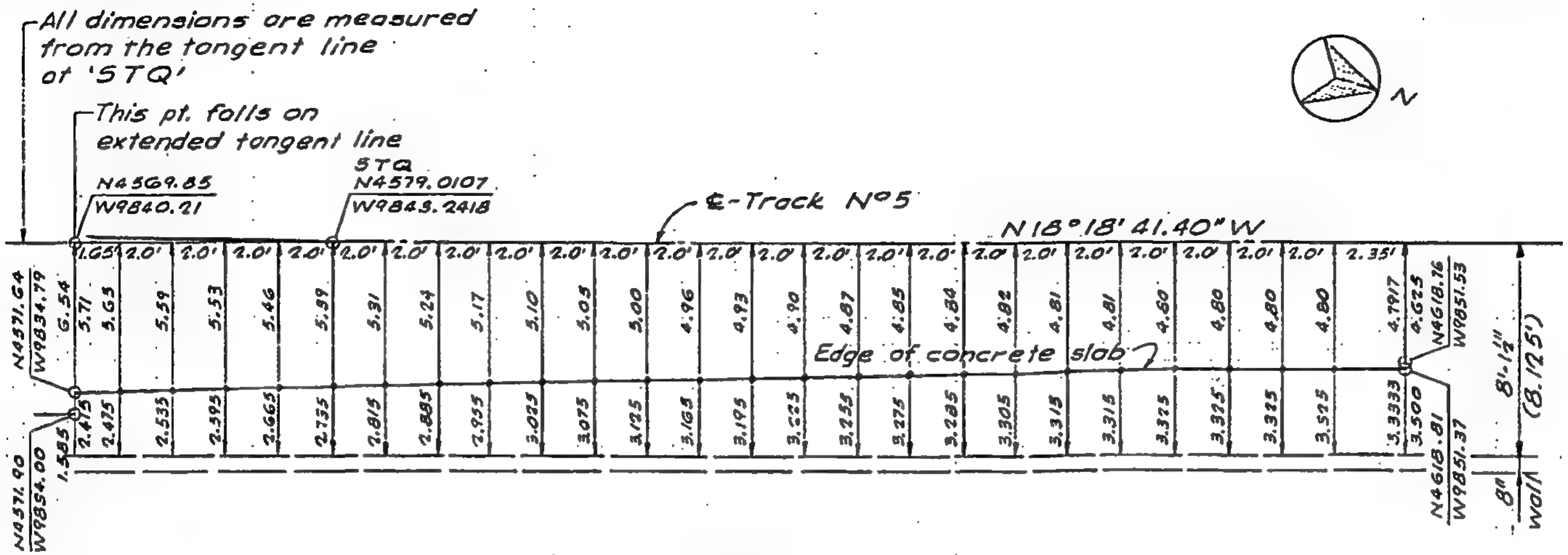

PLATFORM C

(SOUTH PORTION)

($\frac{3}{16}$" = 1'-0")

LICENSED PROFESSIONAL ENGINEER LESLIE E. ROBERTSON No. 34360 UNIVERSITY OF THE STATE OF NEW YORK

DESIGNED

DRAWN G.K.

REVIEWED E.L.

Ref. Dwg. HM-224-68 (3-12-69)

8-JK7-4.4

SKILLING, HELLE, CHRISTIANSEN, ROBERTSON — Structural & Civil Engineers

PROJECT THE WORLD TRADE CENTER | TITLE PATH SECTIONS | DATE 10-31-69

REVISIONS

2-10-70

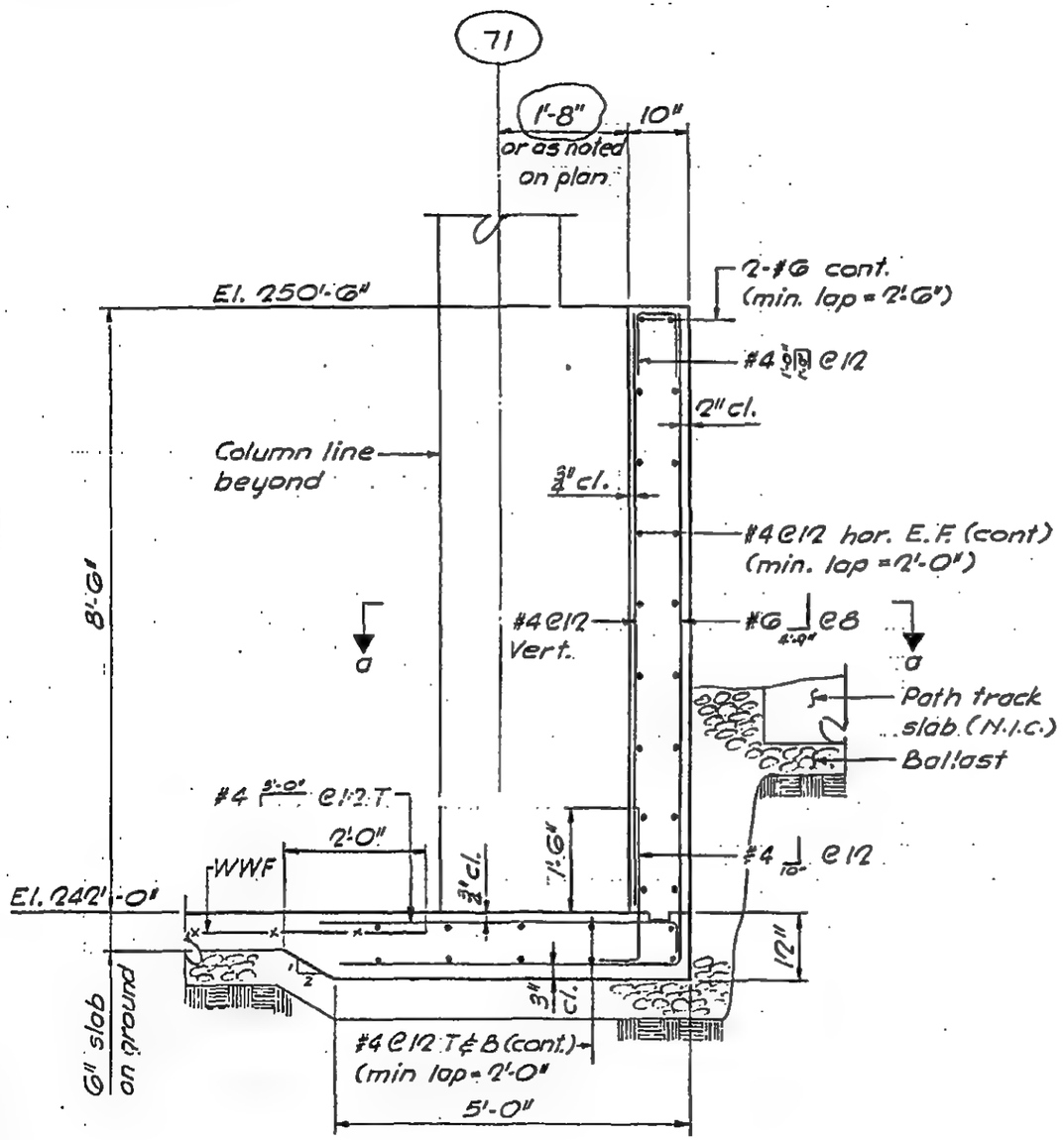

SECTION A-A

(½" = 1'-0")

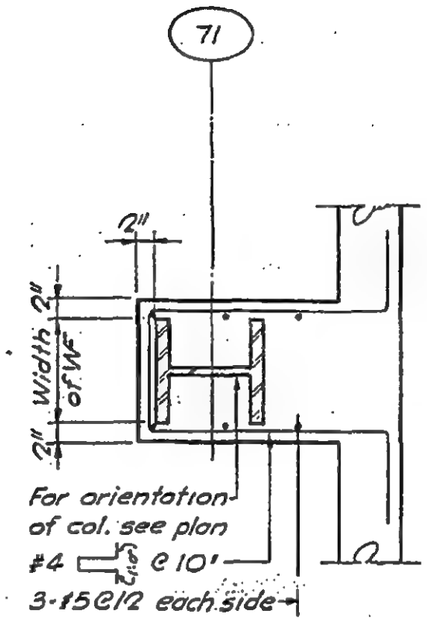

SECTION a-a

(No scale)

LICENSED PROFESSIONAL ENGINEER — LESLIE E. ROBERTSON — No 34360 — UNIVERSITY OF THE STATE OF NEW YORK

DESIGNED E.L.

DRAWN G.K.

REVIEWED

8-UK7-5.1

SKILLING, HELLE, CHRISTIANSEN, ROBERTSON — Structural & Civil Engineers

PROJECT THE WORLD TRADE CENTER | TITLE PATH SECTIONS | DATE 12-10-69

REVISIONS

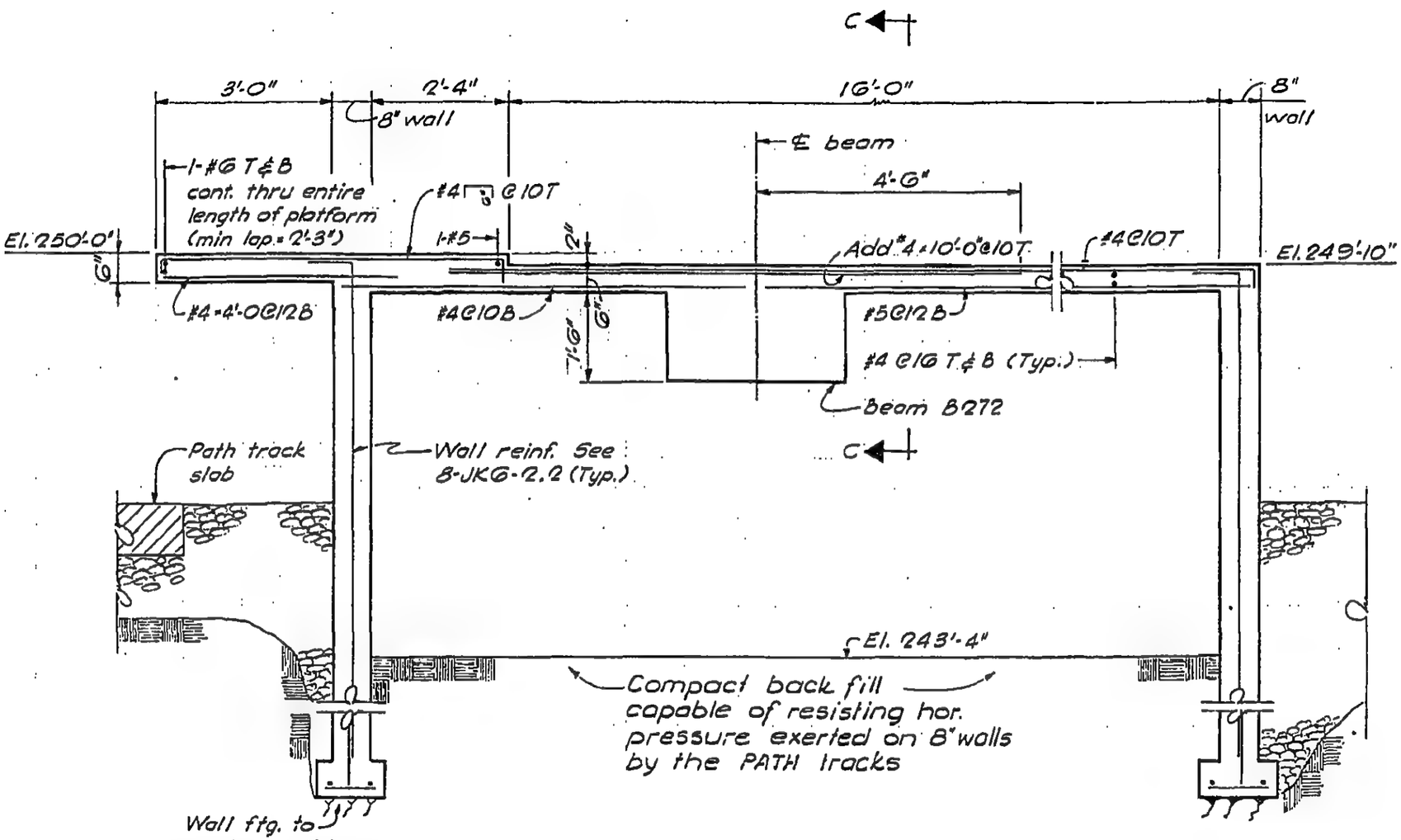

SECTION B-B

(½" = 1'-0")

LICENSED PROFESSIONAL ENGINEER — LESLIE E. ROBERTSON — No 34360 — UNIVERSITY OF THE STATE OF NEW YORK

DESIGNED

DRAWN G.K.

REVIEWED E.L.

8-JK7-5.2

SKILLING, HELLE, CHRISTIANSEN, ROBERTSON — Structural & Civil Engineers

PROJECT THE WORLD TRADE CENTER | TITLE PATH SECTIONS | DATE 12-10-69

REVISIONS

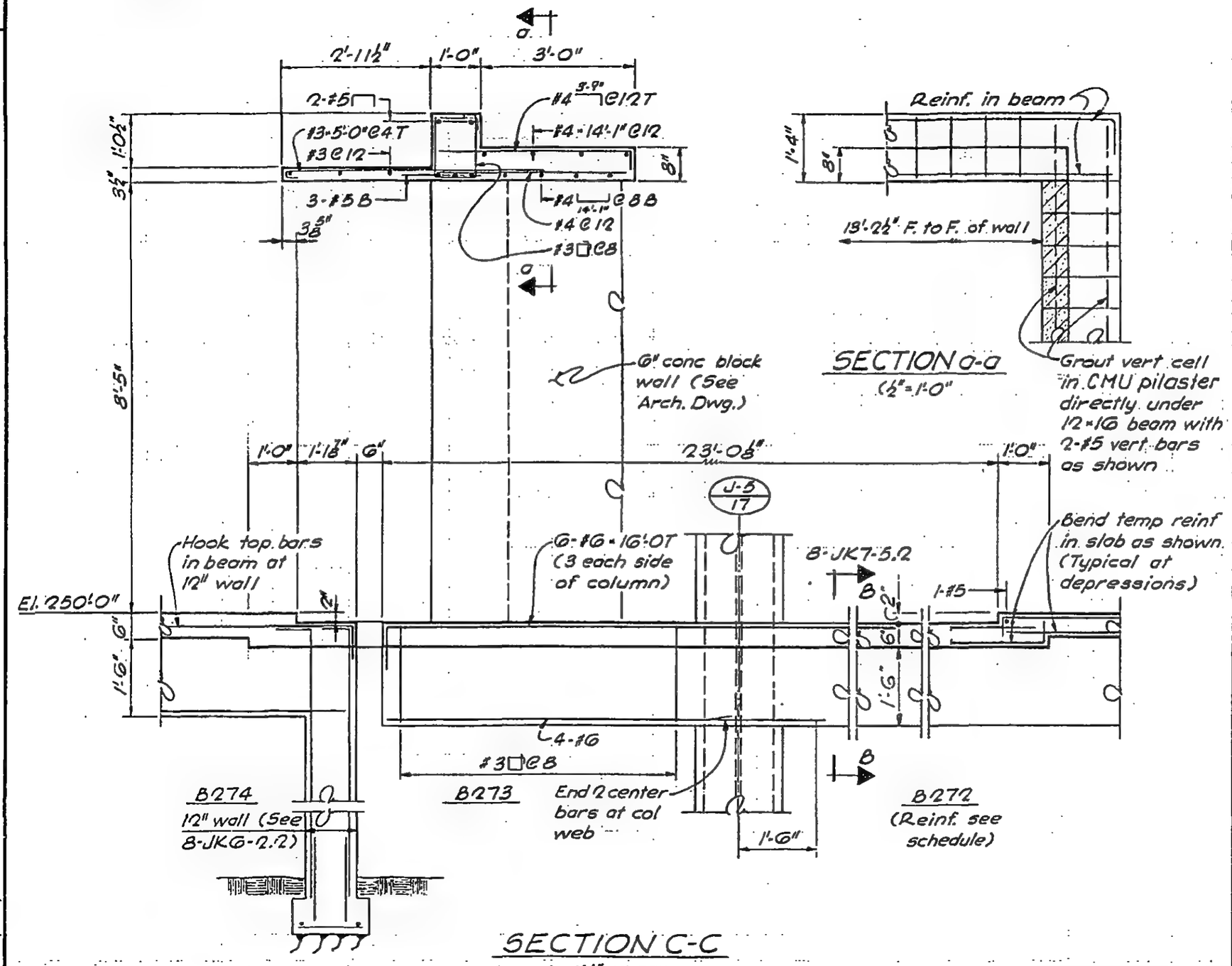

SECTION C-C
(½"=1'-0")

SECTION O-O
(½"=1'-0")

LICENSED PROFESSIONAL ENGINEER
LESLIE E. ROBERTSON
No. 34360
UNIVERSITY OF THE STATE OF NEW YORK

DESIGNED

DRAWN G.K.

REVIEWED E.L.

8-JK7-5.3

SKILLING, HELLE, CHRISTIANSEN, ROBERTSON. Structural & Civil Engineers

PROJECT THE WORLD TRADE CENTER | TITLE PATH SECTIONS | DATE 12-10-69

REVISIONS

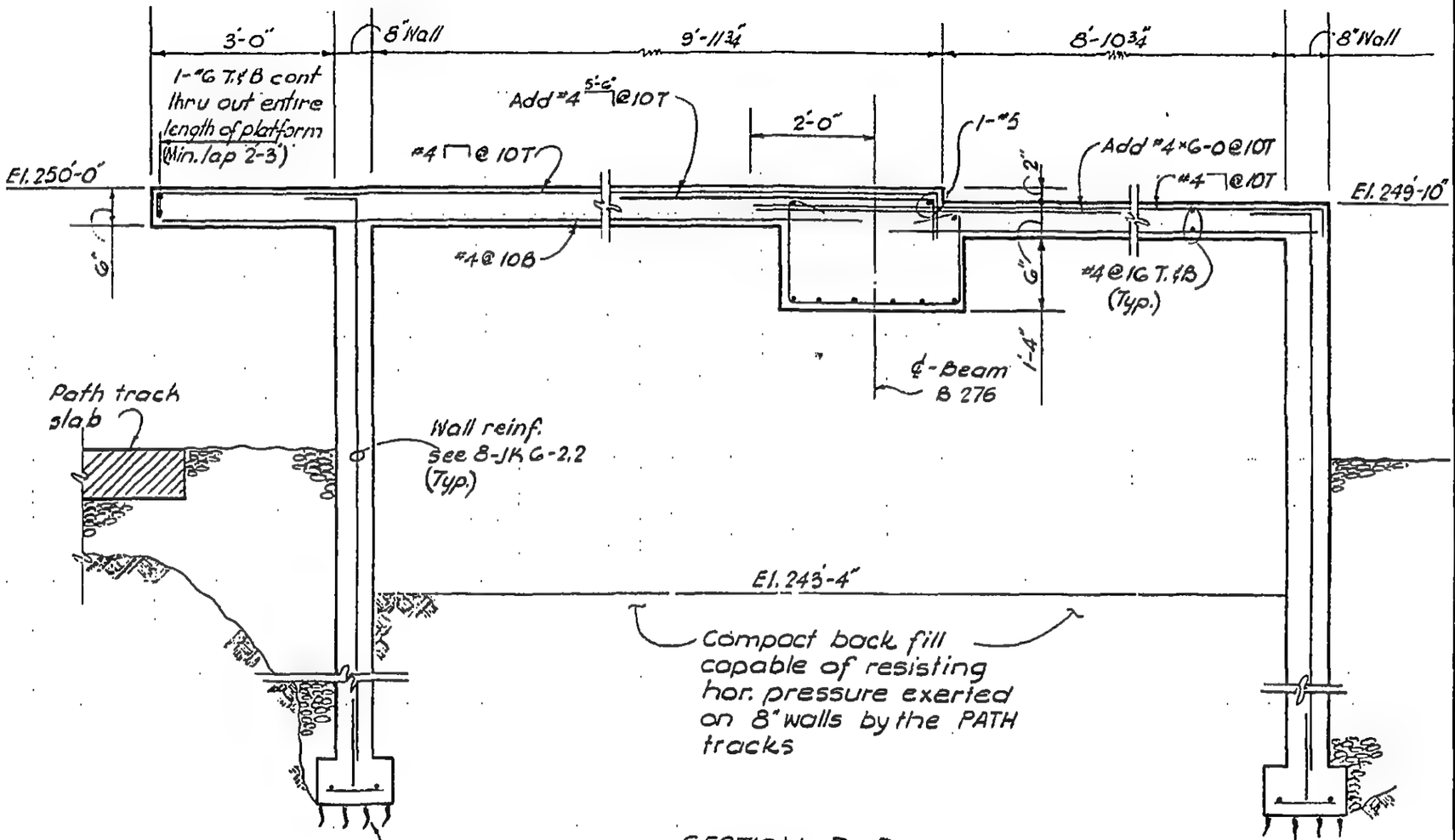

SECTION D-D
(½"=1'-0")

LICENSED PROFESSIONAL ENGINEER LESLIE E. ROBERTSON No. 34360 UNIVERSITY OF THE STATE OF NEW YORK

DESIGNED

DRAWN D.C.Huggins

REVIEWED E.L.

8-JK7-5.4

SKILLING, HELLE, CHRISTIANSEN, ROBERTSON — Structural & Civil Engineers

PROJECT THE WORLD TRADE CENTER | TITLE PATH SECTIONS | DATE 12-10-69

REVISIONS

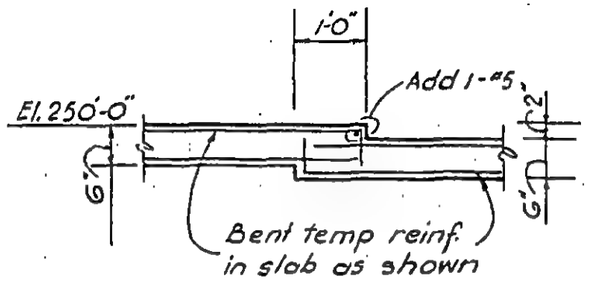

SECTION E-E
(½" = 1'-0")

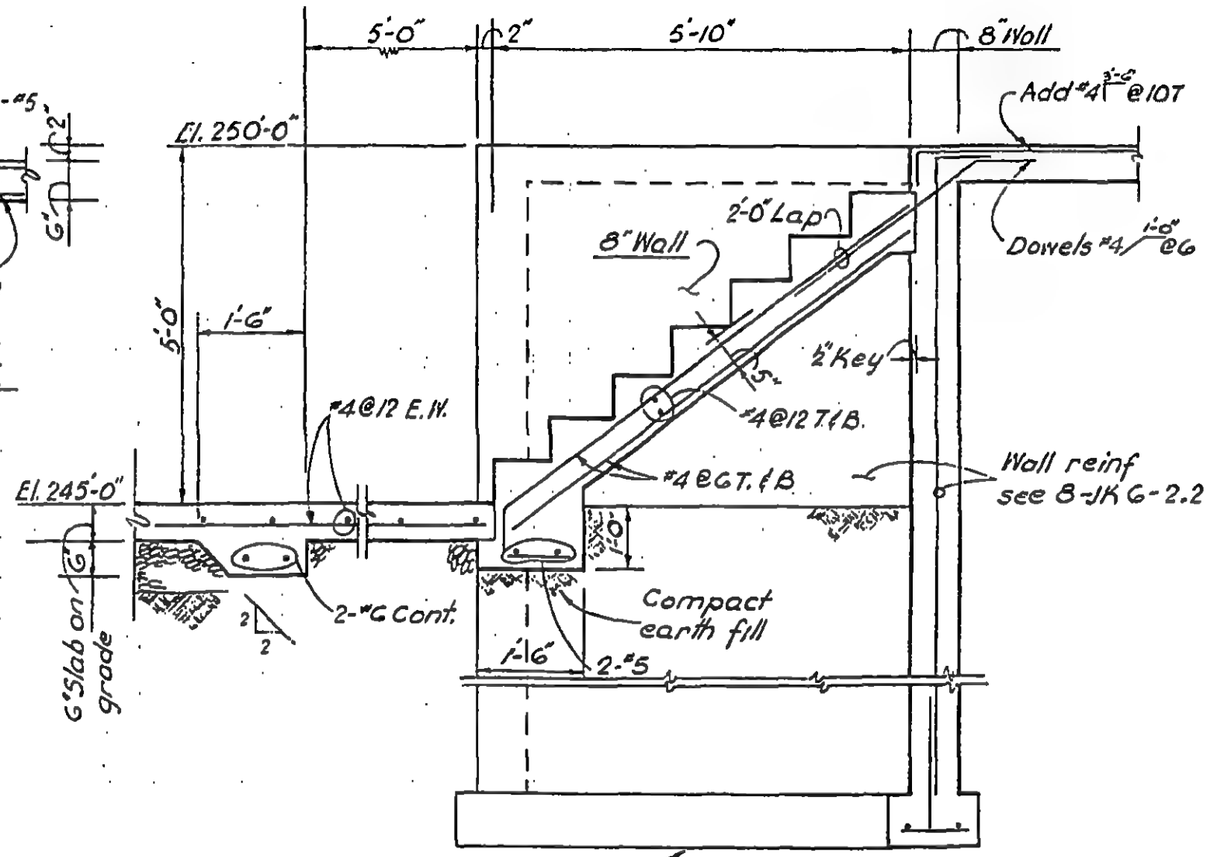

SECTION F-F
(½" = 1'-0")

LICENSED PROFESSIONAL ENGINEER
LESLIE E. ROBERTSON
No 34360
UNIVERSITY OF THE STATE OF NEW YORK

DESIGNED

DRAWN
D.C. Huggins

REVIEWED
E.L.

8-JK7-5.5

SKILLING, HELLE, CHRISTIANSEN, ROBERTSON — Structural & Civil Engineers

PROJECT THE WORLD TRADE CENTER | TITLE PATH SECTIONS | DATE 12-10-69

REVISIONS

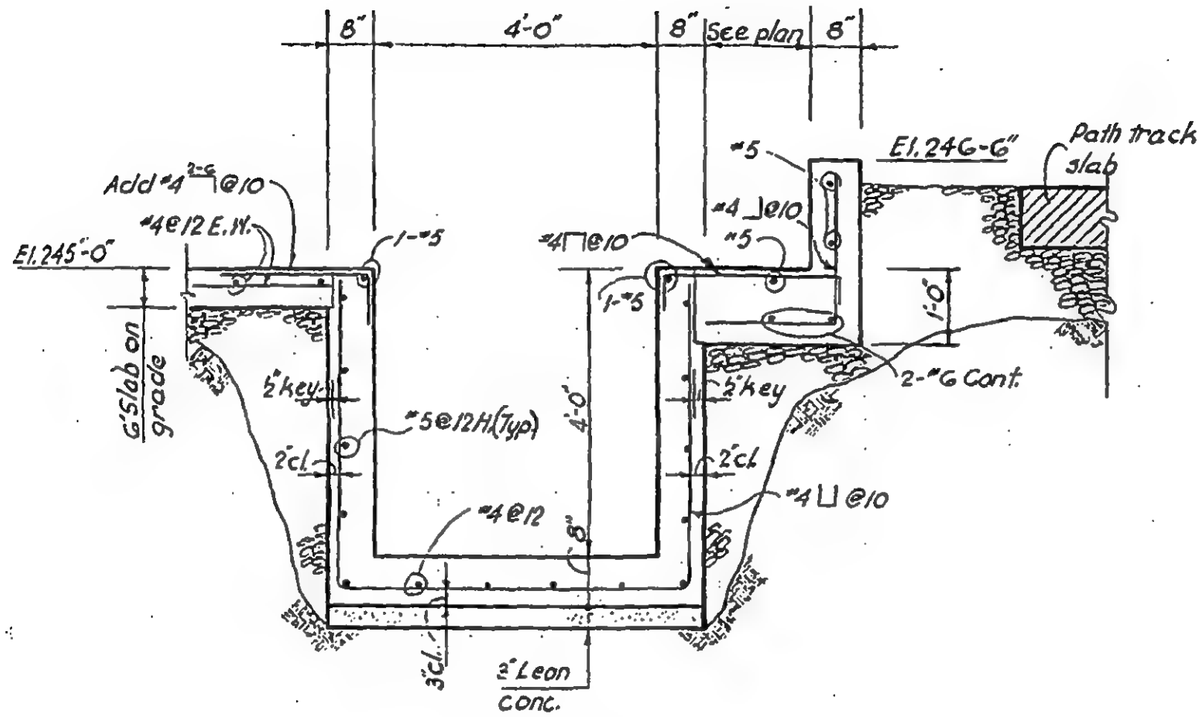

SECTION G-G
(½" = 1'-0")

DESIGNED

DRAWN D.C. Huggins

REVIEWED E.L.

8-JK7-5.6

SKILLING, HELLE, CHRISTIANSEN, ROBERTSON — Structural & Civil Engineers

PROJECT: THE WORLD TRADE CENTER | TITLE: PATH SECTIONS | DATE: 12-10-69

REVISIONS

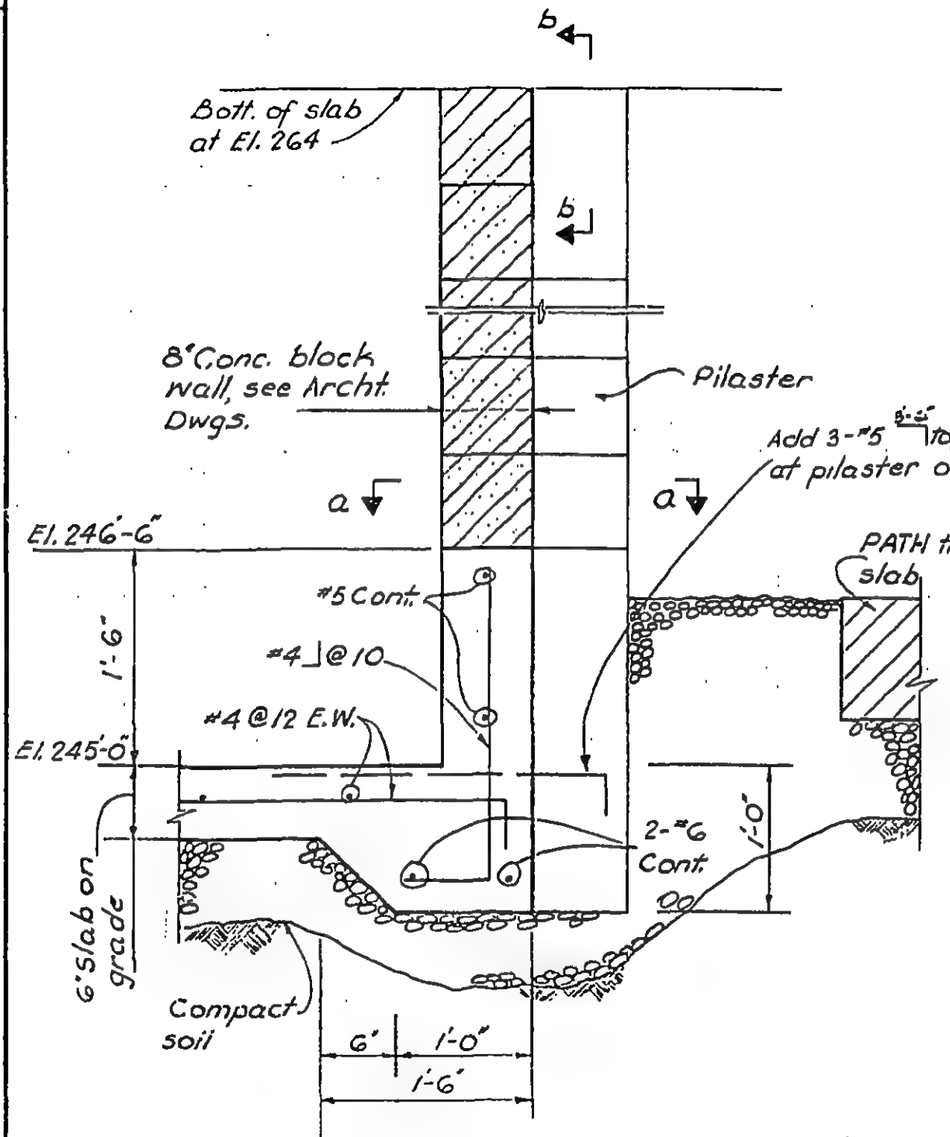

SECTION H-H
(1" = 1'-0")

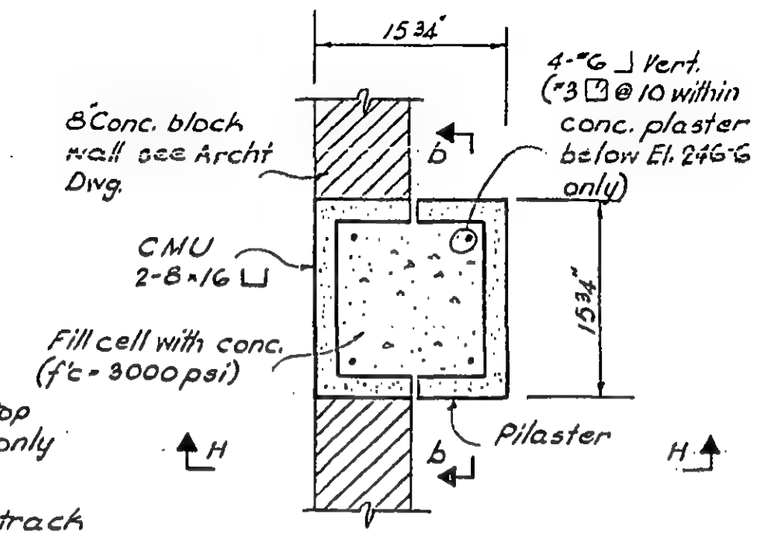

SECTION a-a
(1" = 1'-0")

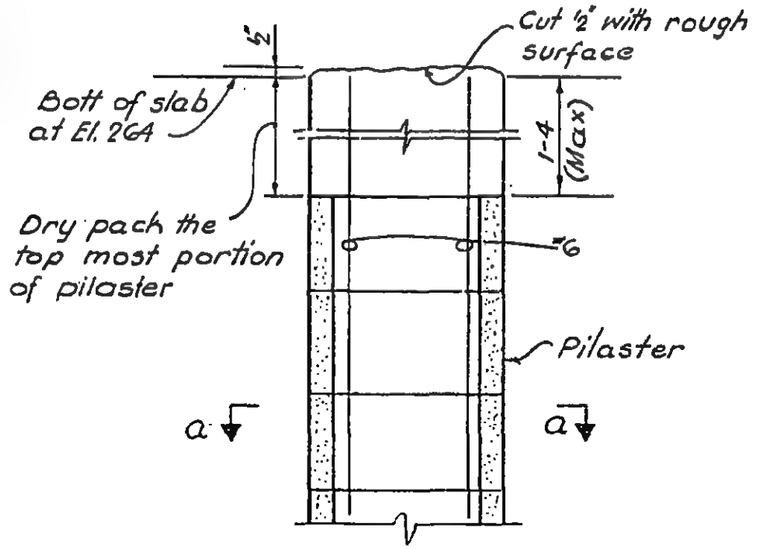

SECTION b-b
(1" = 1'-0")

LICENSED PROFESSIONAL ENGINEER — LESLIE E. ROBERTSON — No 34360 — UNIVERSITY OF THE STATE OF NEW YORK

DESIGNED

DRAWN: D.C. Huggins

REVIEWED: E.L.

8-JK 7-5.7

SKILLING, HELLE, CHRISTIANSEN, ROBERTSON — Structural & Civil Engineers

PROJECT THE WORLD TRADE CENTER | TITLE PATH SECTIONS | DATE 12-10-69

REVISIONS

12-30-69

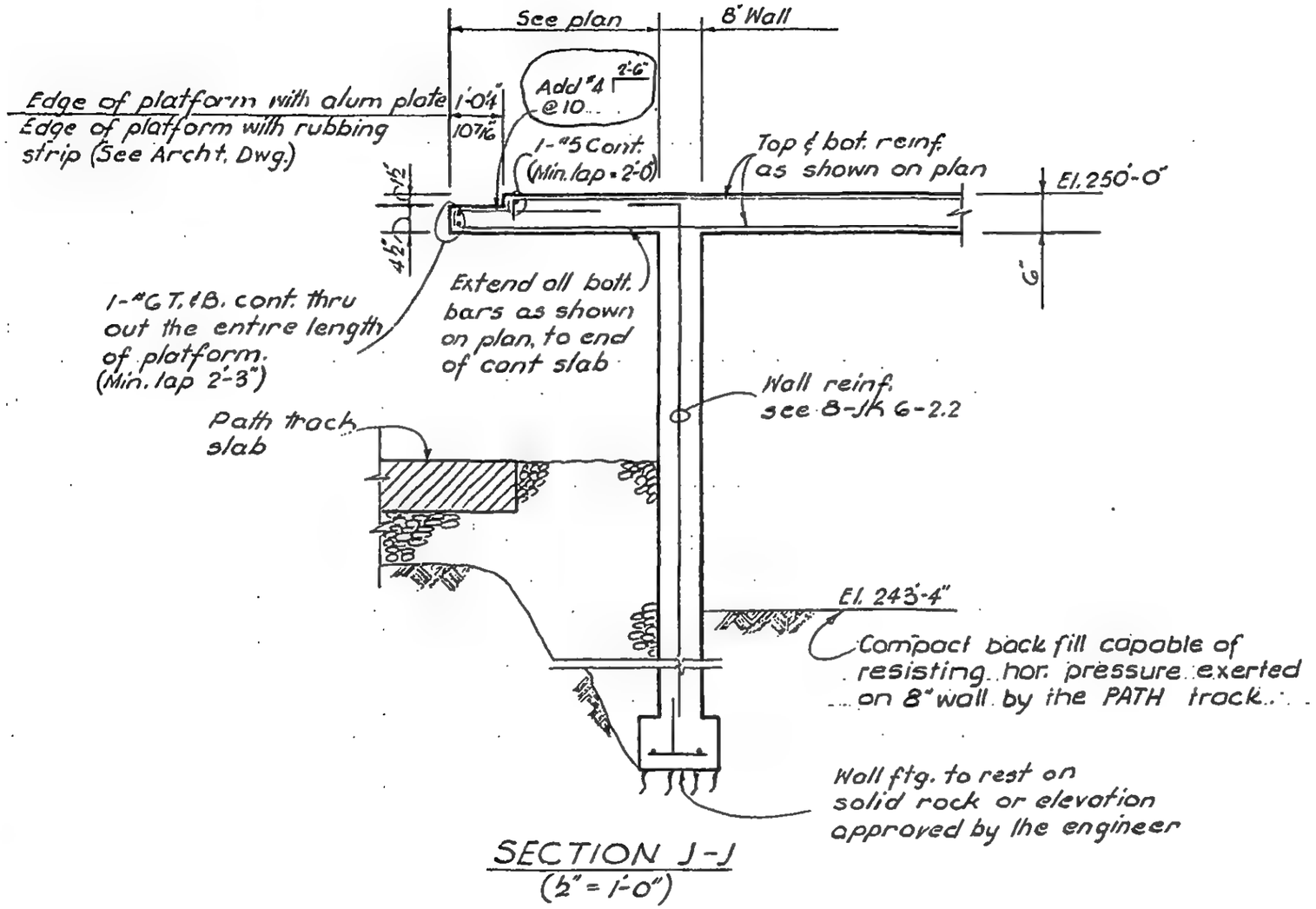

SECTION J-J
(½" = 1'-0")

LICENSED PROFESSIONAL ENGINEER — LESLIE E. ROBERTSON — No 34360 — UNIVERSITY OF THE STATE OF NEW YORK

DESIGNED

DRAWN D.C. Huggins

REVIEWED E.L.

8-JK7-5.8

SKILLING, HELLE, CHRISTIANSEN, ROBERTSON — Structural & Civil Engineers

PROJECT THE WORLD TRADE CENTER | TITLE PATH SECTIONS | DATE 12-22-69

REVISIONS

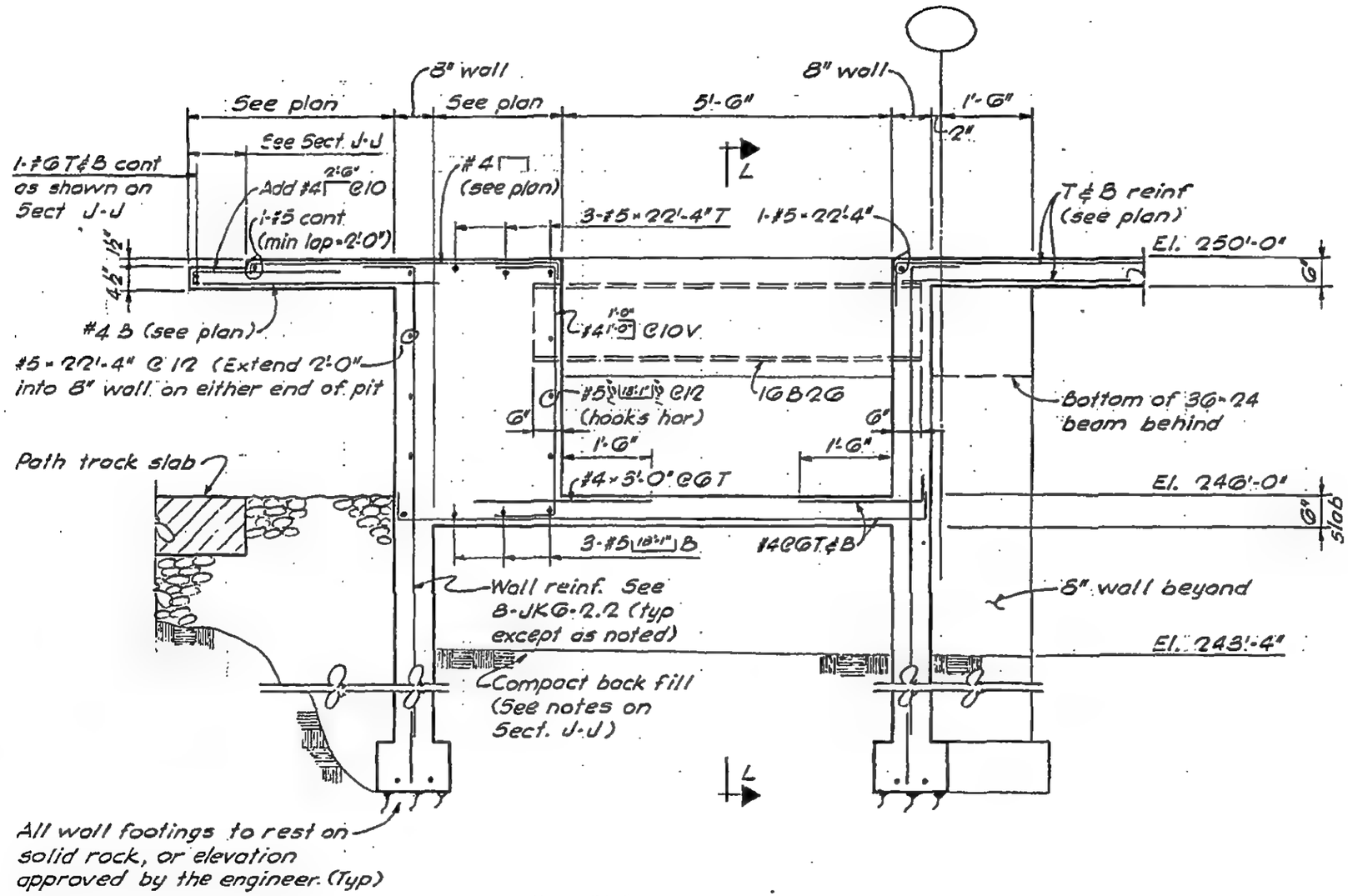

SECTION K-K

(1/2"=1'-0")

LICENSED PROFESSIONAL ENGINEER LESLIE E. ROBERTSON No. 34360 UNIVERSITY OF THE STATE OF NEW YORK

DESIGNED

DRAWN G.K.

REVIEWED E.L.

B-JK7-5.9

SKILLING, HELLE, CHRISTIANSEN, ROBERTSON — Structural & Civil Engineers

PROJECT THE WORLD TRADE CENTER | TITLE PATH SECTIONS | DATE 12-22-69

REVISIONS

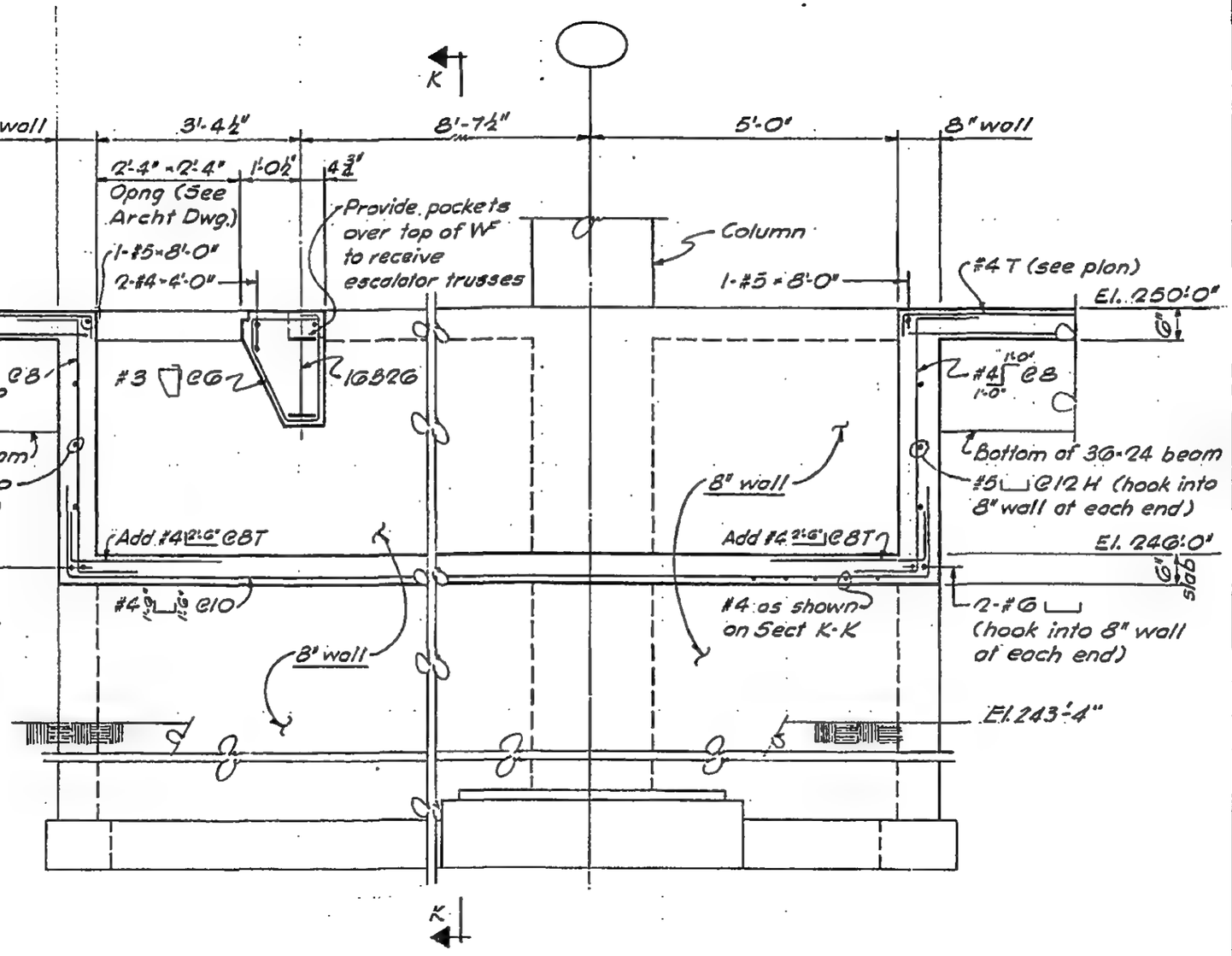

SECTION L-L

(½" = 1'-0")

LICENSED PROFESSIONAL ENGINEER LESLIE E. ROBERTSON NO. 34360 UNIVERSITY OF THE STATE OF NEW YORK

DESIGNED

DRAWN G.K.

REVIEWED E.L.

8-JK7-5.10

SKILLING, HELLE, CHRISTIANSEN, ROBERTSON — Structural & Civil Engineers

PROJECT THE WORLD TRADE CENTER | TITLE PATH SECTIONS | DATE 12-22-69

REVISIONS

12-30-69

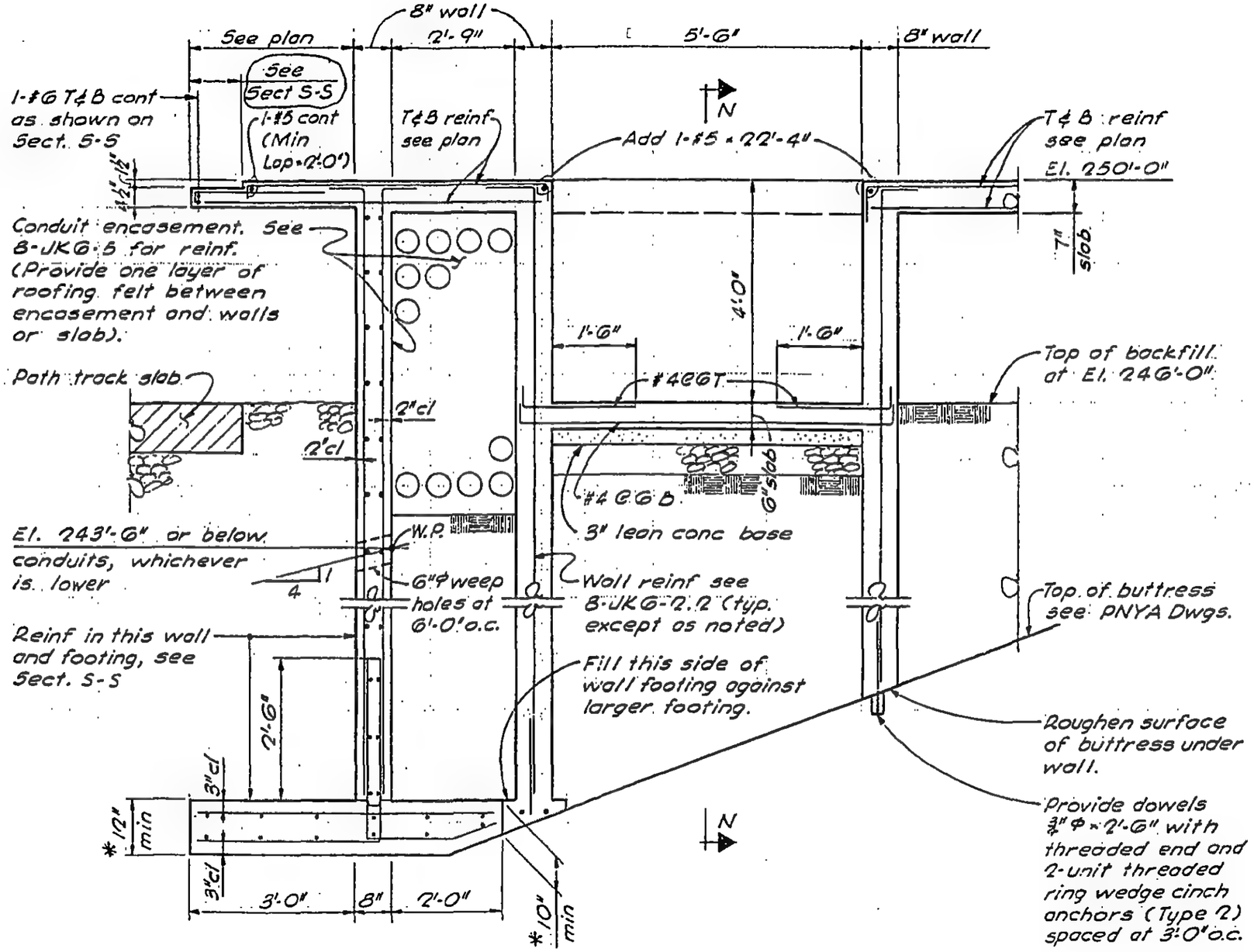

* whichever governs

SECTION M-M

(½" = 1'-0")

LICENSED PROFESSIONAL ENGINEER — LESLIE E. ROBERTSON — No. 34360 — UNIVERSITY OF THE STATE OF NEW YORK

DESIGNED

DRAWN G.K.

REVIEWED E.L.

8-JK7-5.11

SKILLING, HELLE, CHRISTIANSEN, ROBERTSON — Structural & Civil Engineers

PROJECT THE WORLD TRADE CENTER | TITLE PATH SECTIONS | DATE 12-22-69

REVISIONS

12-30-69

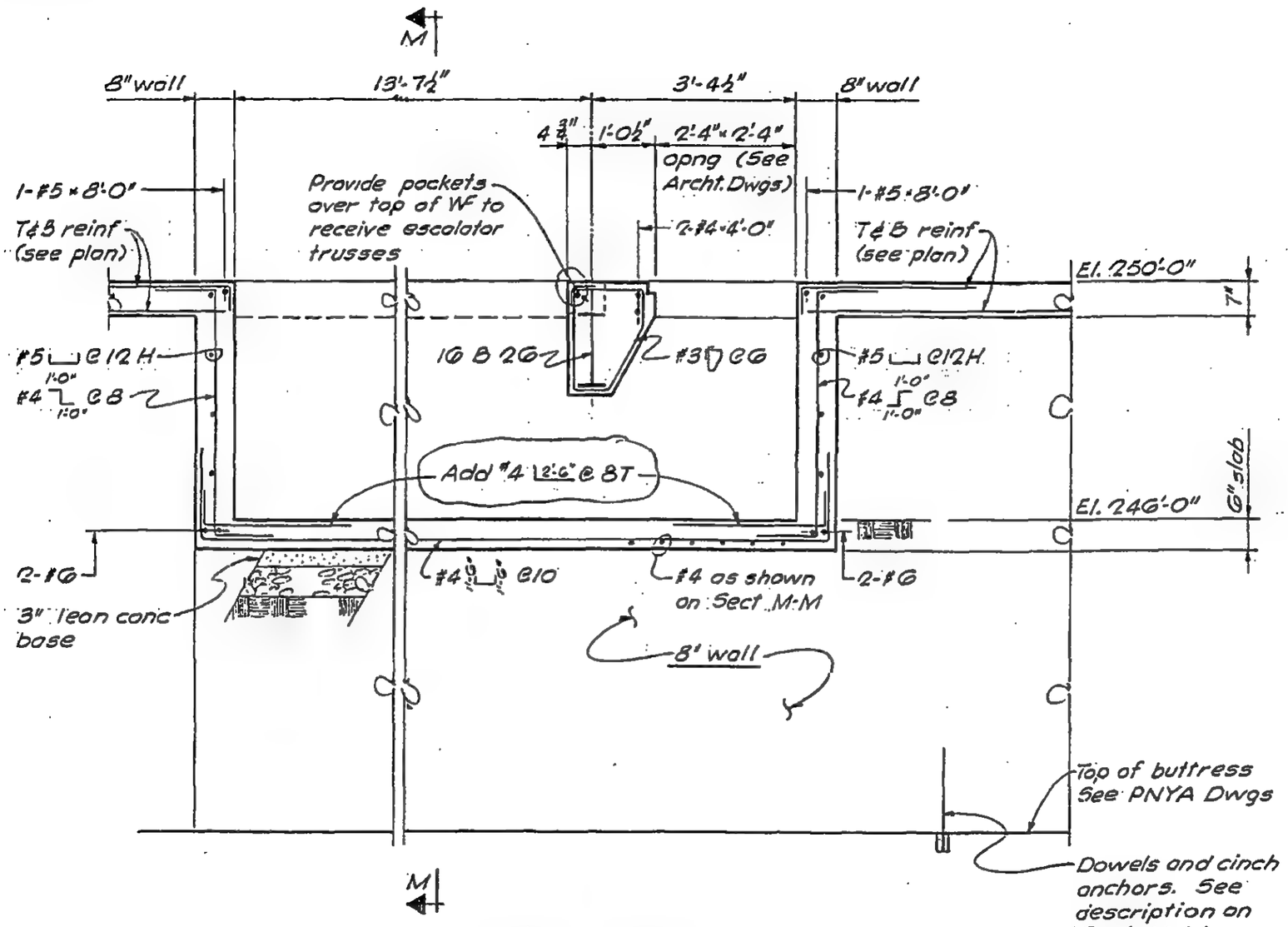

SECTION N-N

(½" = 1'-0")

LICENSED PROFESSIONAL ENGINEER — LESLIE E. ROBERTSON — No 34360 — UNIVERSITY OF THE STATE OF NEW YORK

DESIGNED

DRAWN G.K.

REVIEWED E.L.

8-JK7-5.12

SKILLING, HELLE, CHRISTIANSEN, ROBERTSON — Structural & Civil Engineers

PROJECT THE WORLD TRADE CENTER | TITLE PATH SECTIONS | DATE 12-22-69

REVISIONS

12-30-69

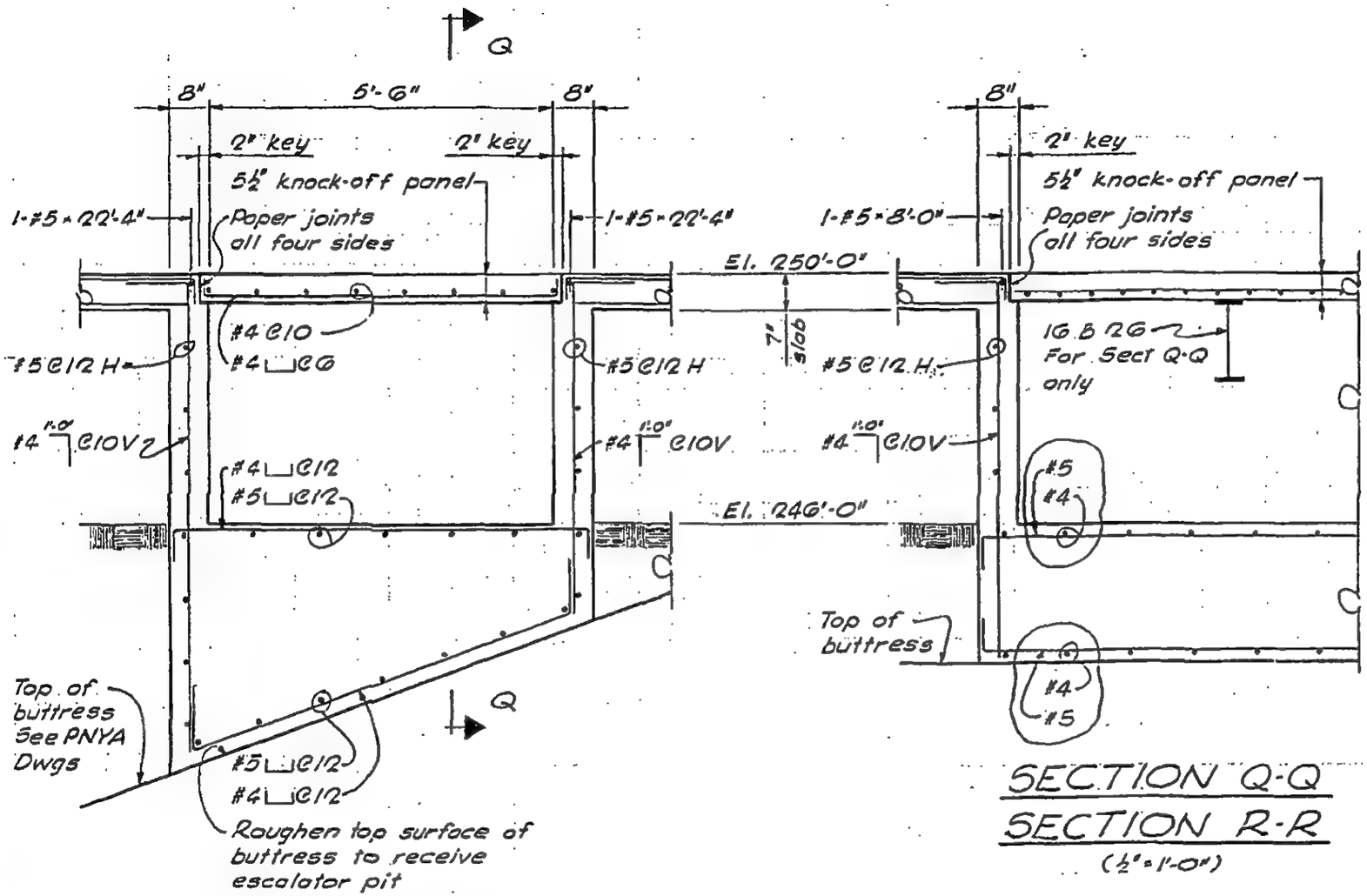

SECTION P-P

(½" = 1'-0")

SECTION Q-Q

SECTION R-R

(½" = 1'-0")

LICENSED PROFESSIONAL ENGINEER — LESLIE E. ROBERTSON — No. 34360 — UNIVERSITY OF THE STATE OF NEW YORK

DESIGNED

DRAWN G.K.

REVIEWED E.L.

8-JK7-5.13

SKILLING, HELLE, CHRISTIANSEN, ROBERTSON — Structural & Civil Engineers

PROJECT THE WORLD TRADE CENTER | TITLE PATH SECTIONS | DATE 12-22-69

REVISIONS

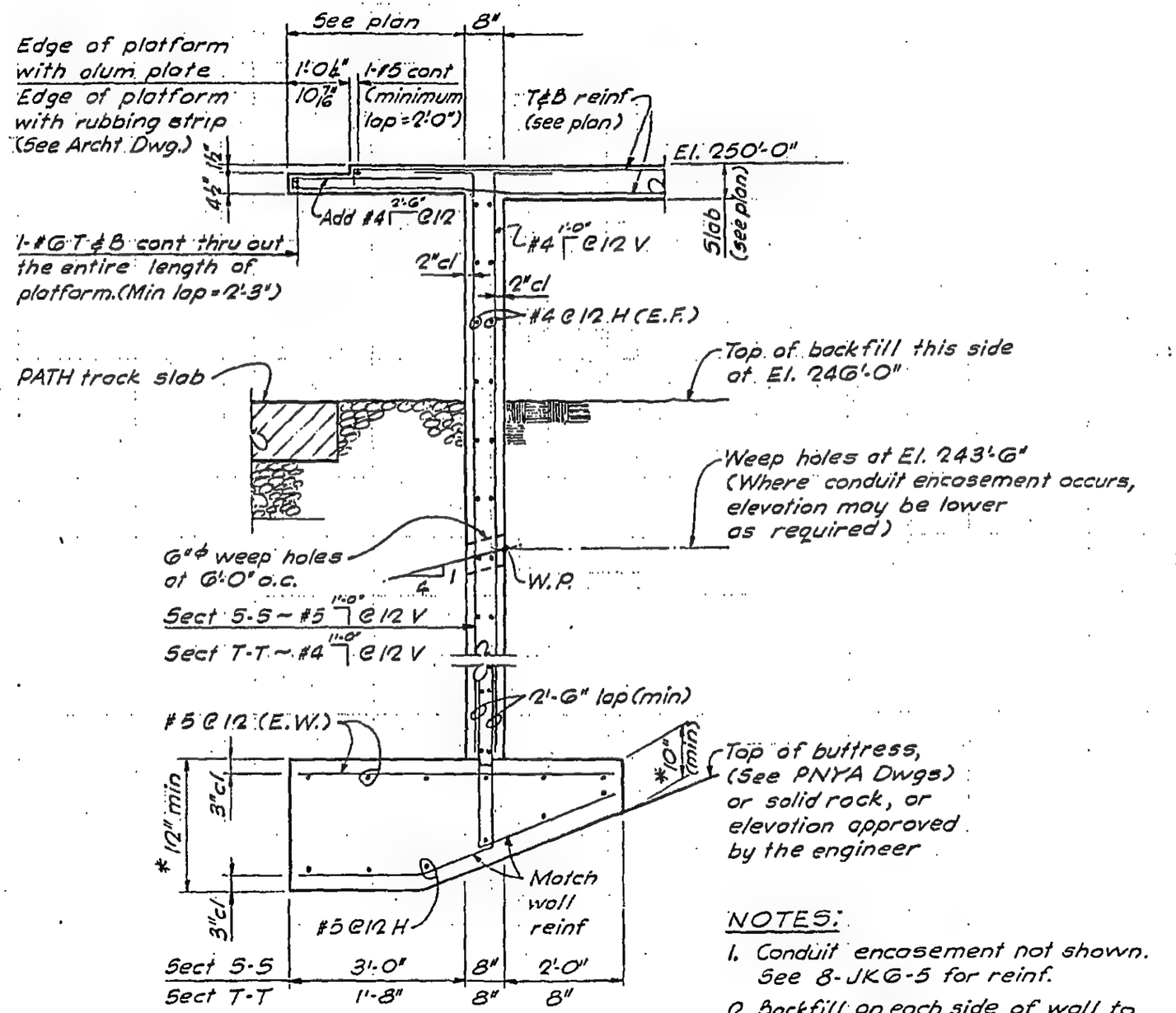

*Whichever governs

SECTION S-S
SECTION T-T
(½"=1'-0")

NOTES:

1. Conduit encasement not shown. See 8-JKG-5 for reinf.
2. Backfill on each side of wall to be carried simultaneously.

LICENSED PROFESSIONAL ENGINEER — LESLIE E. ROBERTSON — No. 34380 — UNIVERSITY OF THE STATE OF NEW YORK

DESIGNED

DRAWN G.K.

REVIEWED E.L.

8-JK7-5.14

SKILLING, HELLE, CHRISTIANSEN, ROBERTSON — Structural & Civil Engineers

PROJECT: THE WORLD TRADE CENTER | TITLE: PATH SECTIONS | DATE: 12-22-69

REVISIONS

J-6 / 17

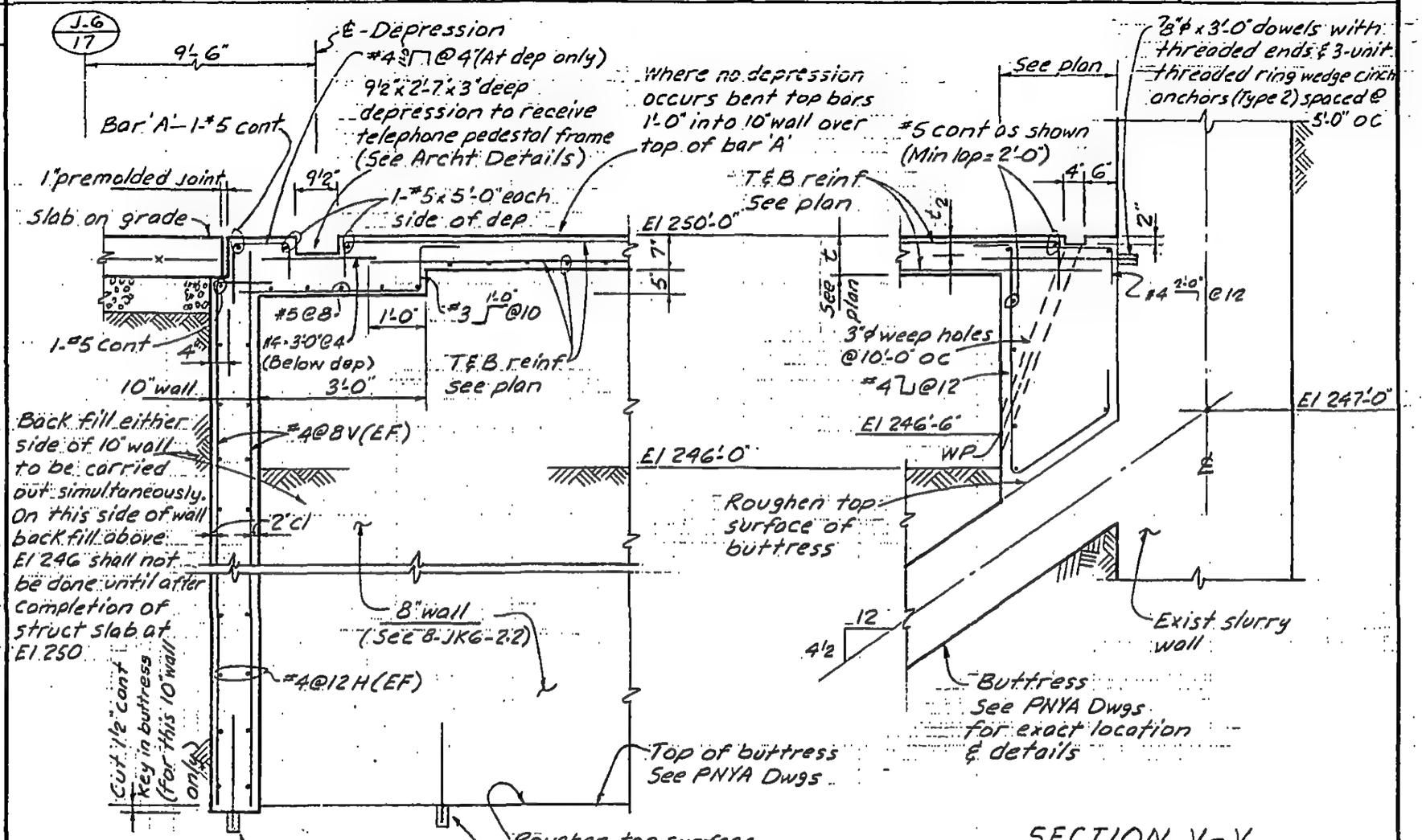

SECTION U-U
(½"=1'-0")

SECTION V-V
(½"=1'-0")

LICENSED PROFESSIONAL ENGINEER — LESLIE E. ROBERTSON — No. 34360 — UNIVERSITY OF THE STATE OF NEW YORK

DESIGNED

DRAWN: A. FRANQUI

REVIEWED: E.L.

8-JK7-5.15

SKILLING, HELLE, CHRISTIANSEN, ROBERTSON — Structural & Civil Engineers

PROJECT: THE WORLD TRADE CENTER | TITLE: PATH SECTIONS | DATE: 12-22-69

REVISIONS
12-30-69
3-4-70

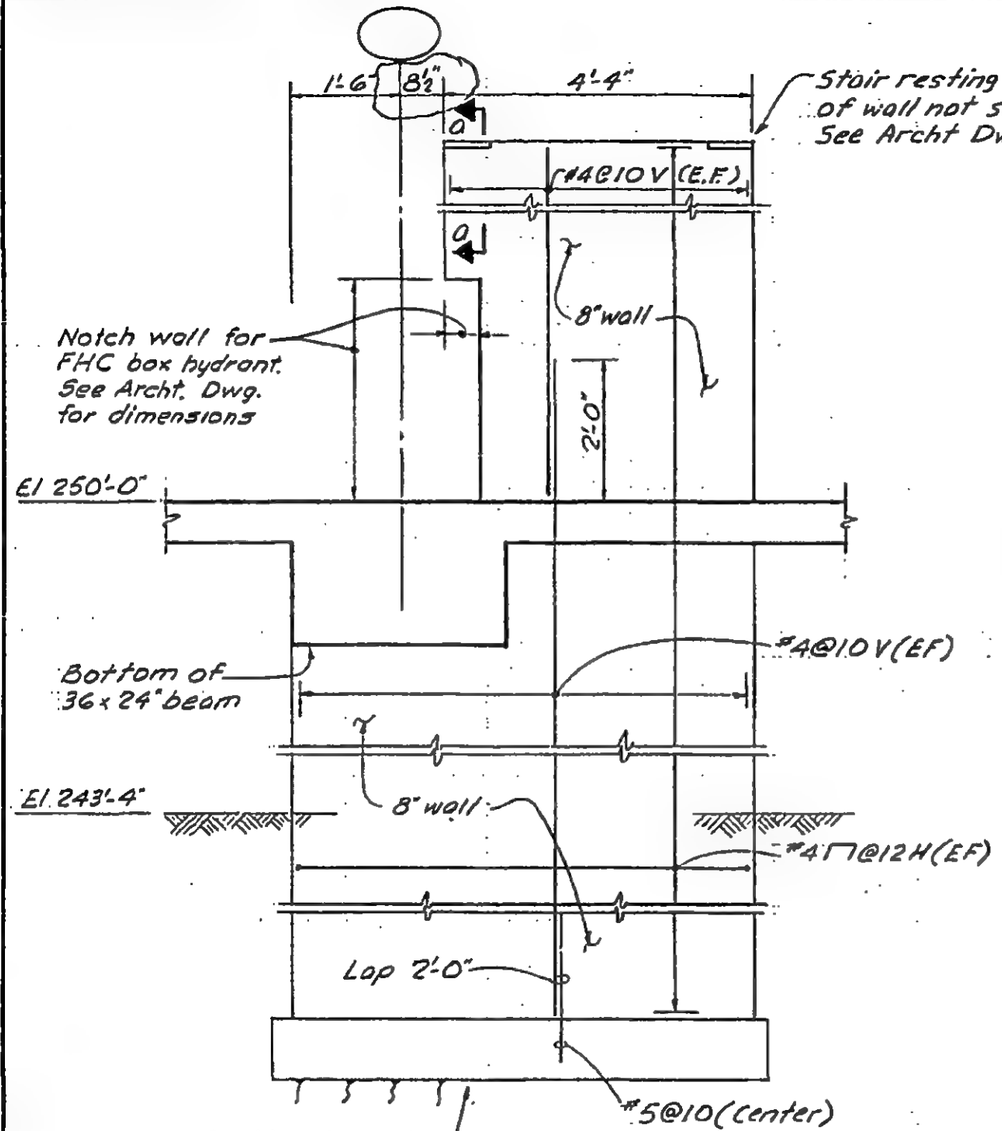

SECTION W-W
(½" = 1'-0")

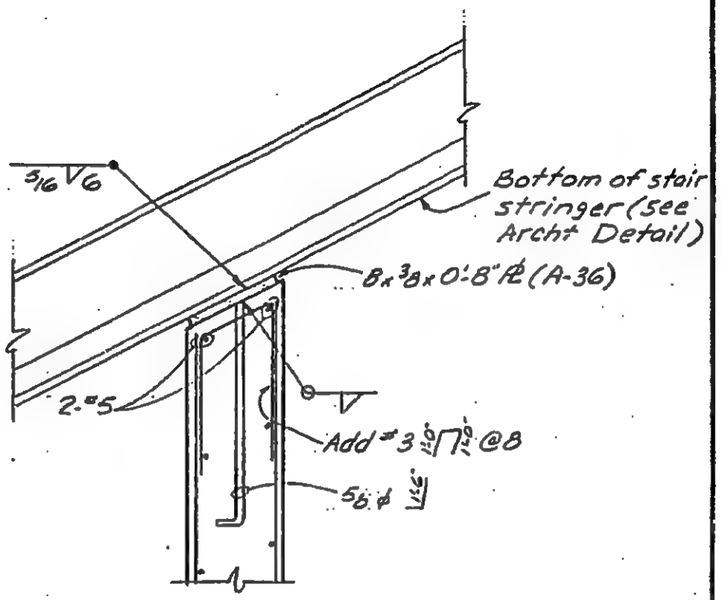

SECTION A-A
(1" = 1'-0")

LICENSED PROFESSIONAL ENGINEER — LESLIE E. ROBERTSON — No. 34360 — UNIVERSITY OF THE STATE OF NEW YORK

DESIGNED
DRAWN: A. FRANQUI
REVIEWED: E.L.

8-JK7-5.16

SKILLING, HELLE, CHRISTIANSEN, ROBERTSON — Structural & Civil Engineers

PROJECT THE WORLD TRADE CENTER | TITLE PATH SECTIONS | DATE 12-22-69

REVISIONS
12-30-69
3-4-70

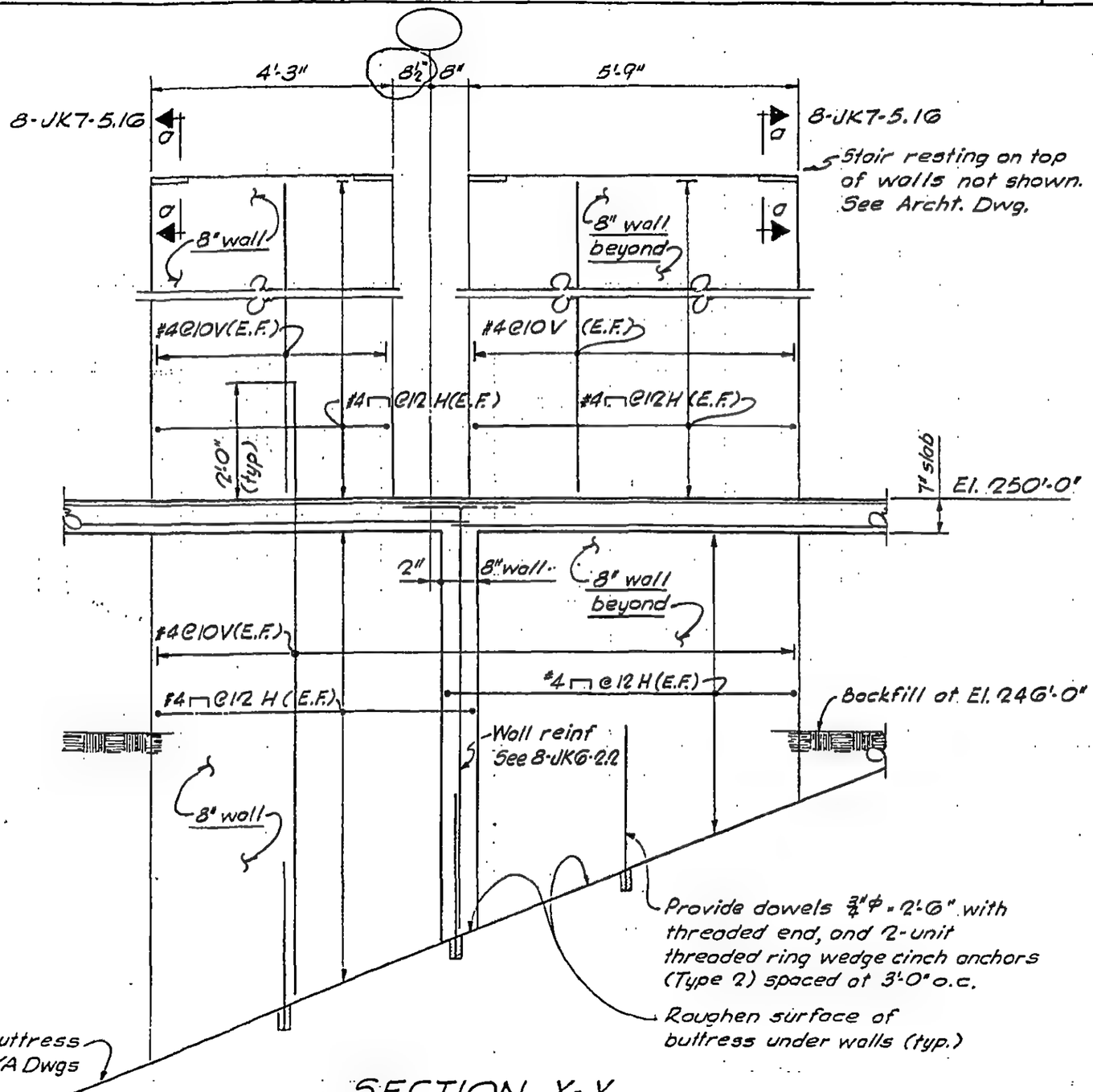

SECTION X-X
(½"=1'-0")

8-JK7-5.17

LICENSED PROFESSIONAL ENGINEER · LESLIE E. ROBERTSON · No 34360 · UNIVERSITY OF THE STATE OF NEW YORK

DESIGNED
DRAWN G.K.
REVIEWED E.L.

SKILLING, HELLE, CHRISTIANSEN, ROBERTSON — Structural & Civil Engineers

PROJECT: THE WORLD TRADE CENTER | TITLE: PATH SECTIONS | DATE: 12-22-69

REVISIONS

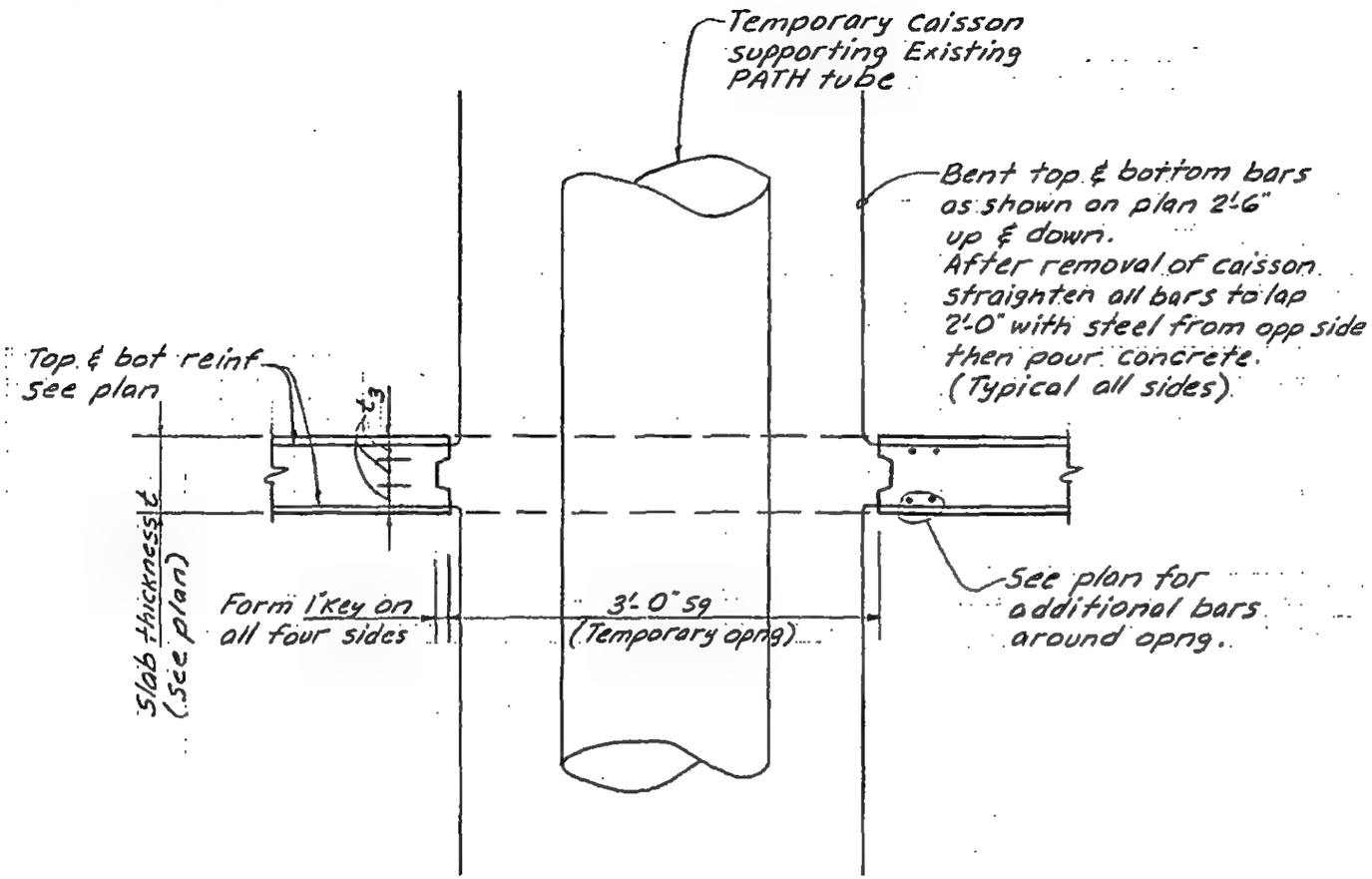

SECTION Y-Y
(1"=1'-0")

LICENSED PROFESSIONAL ENGINEER LESLIE E. ROBERTSON No. 34360 UNIVERSITY OF THE STATE OF NEW YORK

DESIGNED

DRAWN A. FRANQUI

REVIEWED E.L.

8-JK7-5.18

SKILLING, HELLE, CHRISTIANSEN, ROBERTSON — Structural & Civil Engineers

PROJECT THE WORLD TRADE CENTER | TITLE PATH SECTIONS | DATE 12-22-69

REVISIONS

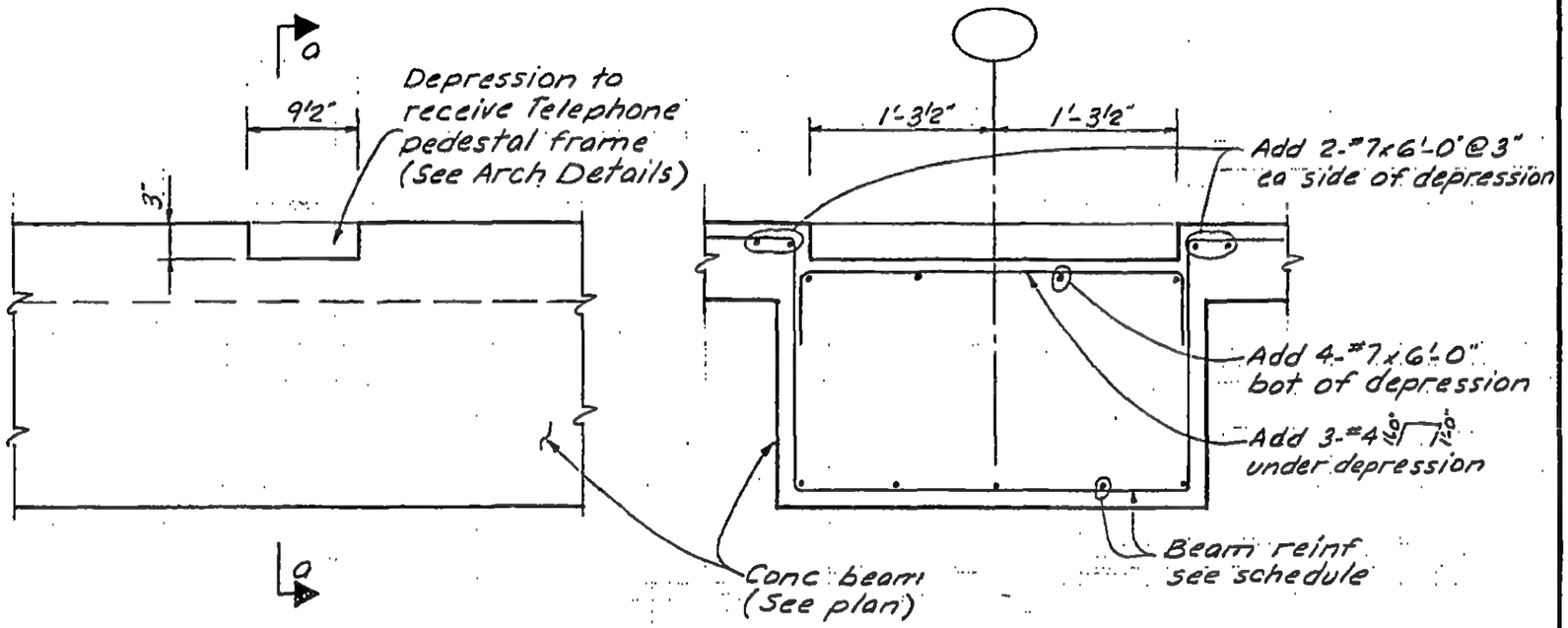

SECTION Z-Z
(1"=1'-0")

SECTION a-a
(1"=1'-0")

LICENSED PROFESSIONAL ENGINEER
LESLIE E. ROBERTSON
No. 34360
UNIVERSITY OF THE STATE OF NEW YORK

DESIGNED E. LIU

DRAWN A. FRANQUI

REVIEWED

8-JK7-5.19

SKILLING - HELLE - CHRISTIANSEN - ROBERTSON Structural & Civil Engineers

PROJECT THE WORLD TRADE CENTER | TITLE PATH SECTIONS | DATE 5-1-68

REVISIONS
7-9-68
12-18-68
5-5-69

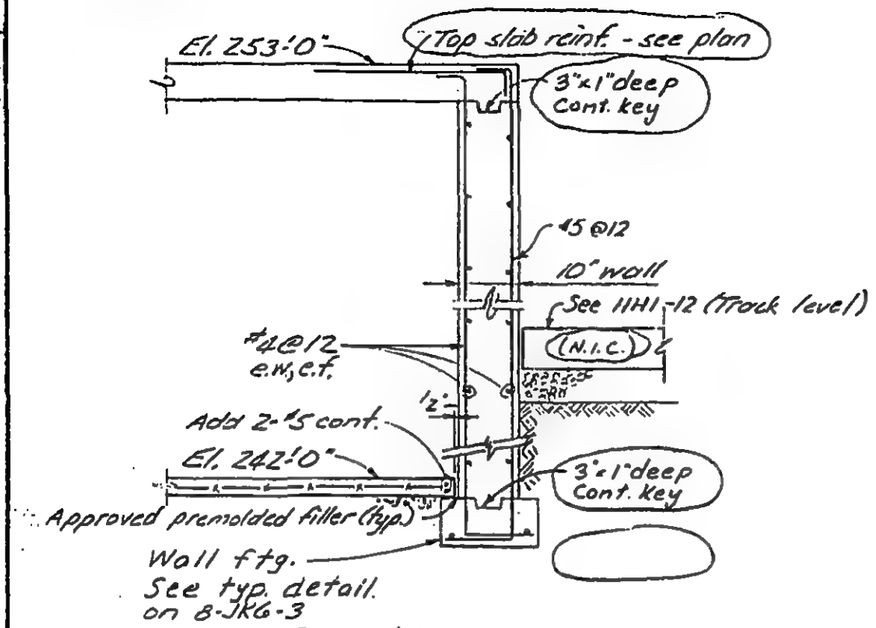

Section J-J

LICENSED PROFESSIONAL ENGINEER
LESLIE E. ROBERTSON
No. 34360
UNIVERSITY OF THE STATE OF NEW YORK

DRAWN S.C.
REVIEWED J.M. & E.L.

8-JK7-6.3

SKILLING, HELLE, CHRISTIANSEN, ROBERTSON — Structural & Civil Engineers

PROJECT THE WORLD TRADE CENTER | TITLE SECTIONS | DATE 12-18-68

REVISIONS

5-5-69

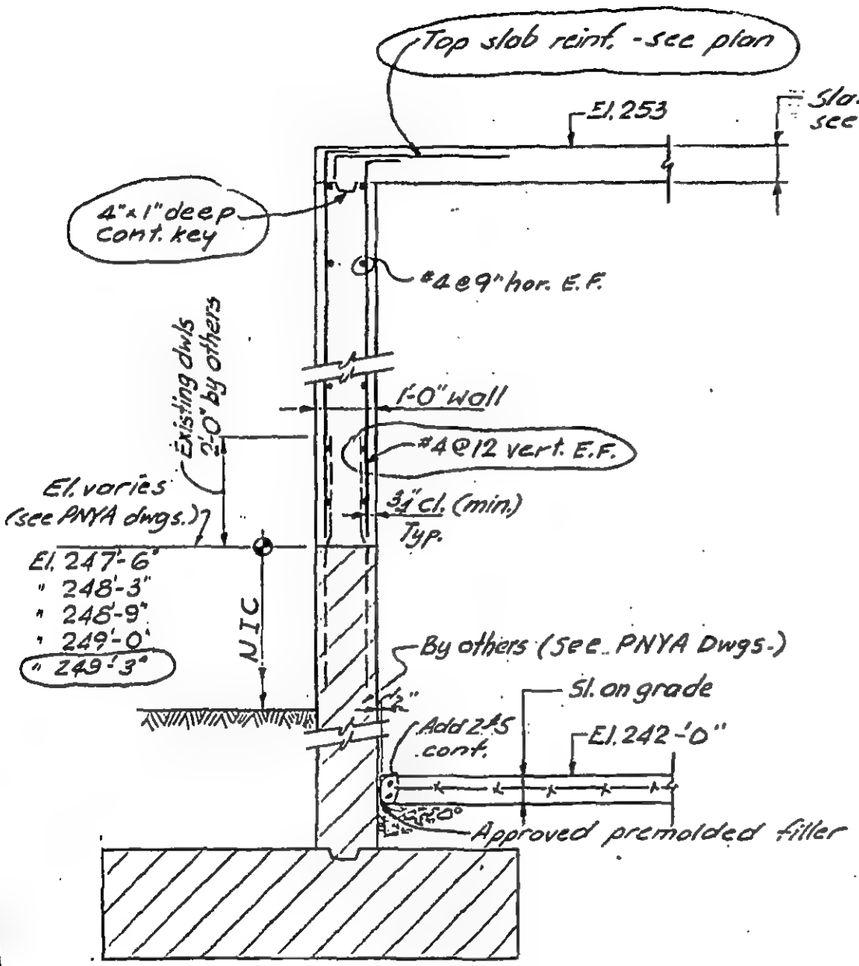

Section K-K

LICENSED PROFESSIONAL ENGINEER
LESLIE E. ROBERTSON
No. 34360
STATE OF NEW YORK

DESIGNED

DRAWN S.C.

REVIEWED J.M. & E.L.

8-JK7-6.5

LICENSED PROFESSIONAL ENGINEER
LESLIE E. ROBERTSON
No. 34360
THE STATE OF NEW YORK
UNIVERSITY OF

DRAWN S.C.
DESIGNED
APPROVED

REVISIONS
2-20-69
3-7-69
4-21-69

SKILLING, HELLE, CHRISTIANSEN, ROBERTSON
Structural & Civil Engineers

PROJECT THE WORLD TRADE CENTER

TITLE PATH SECTIONS.

DATE 12-18-68

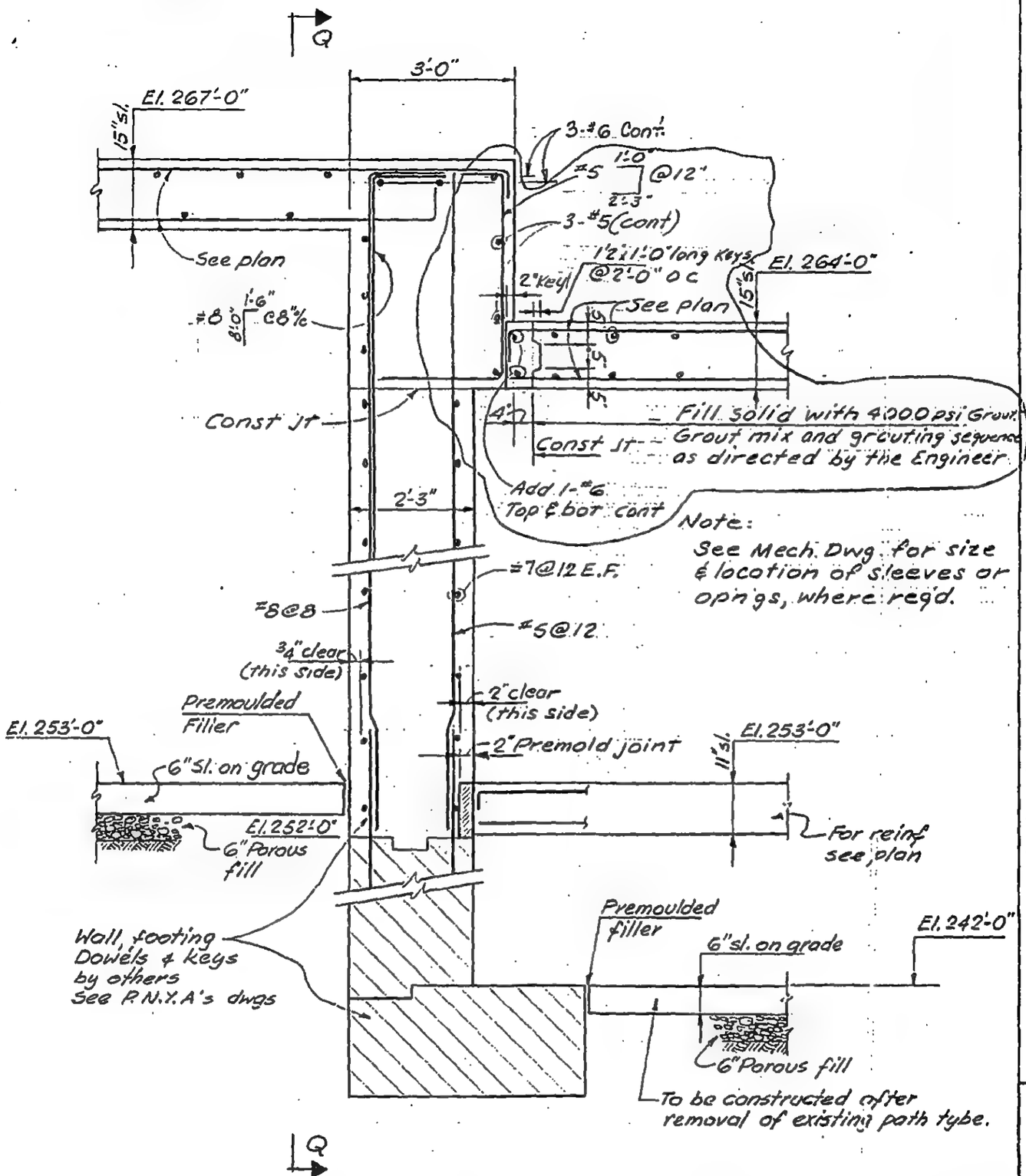

Section P-P

8-JK7-6.9

SKILLING, HELLE, CHRISTIANSEN, ROBERTSON — Structural & Civil Engineers

PROJECT: THE WORLD TRADE CENTER | TITLE: PATH SECTIONS | DATE: 4-21-69

REVISIONS

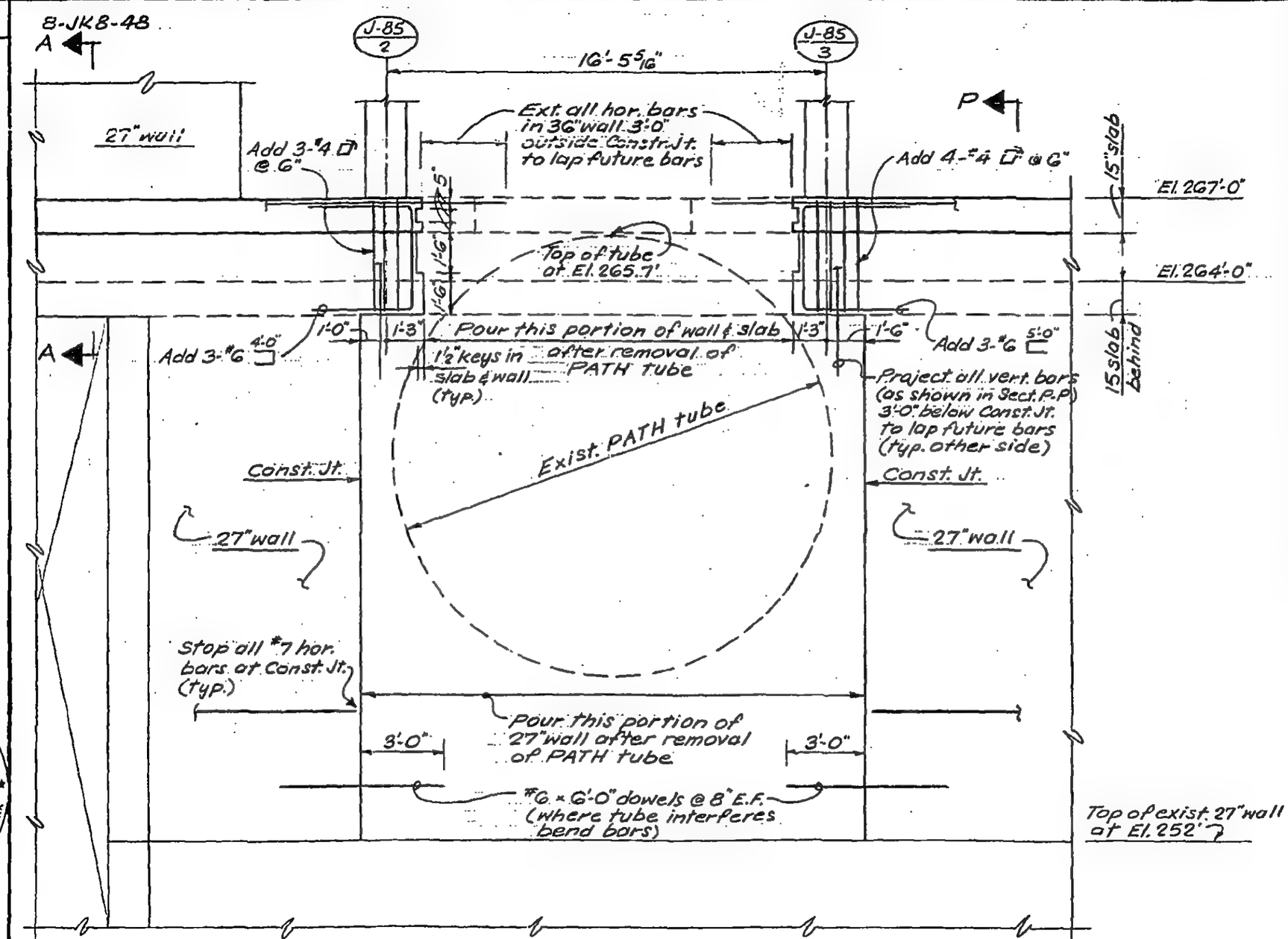

Section Q-Q

LICENSED PROFESSIONAL ENGINEER — LESLIE E. ROBERTSON — No. 34360 — UNIVERSITY OF THE STATE OF NEW YORK

DESIGNED

DRAWN S.C.

REVIEWED E.L.

8-JK7-6.10

SKILLING, HELLE, CHRISTIANSEN, ROBERTSON — Structural & Civil Engineers

PROJECT THE WORLD TRADE CENTER | TITLE PATH SECTIONS | DATE 12-22-69

REVISIONS

5-28-70

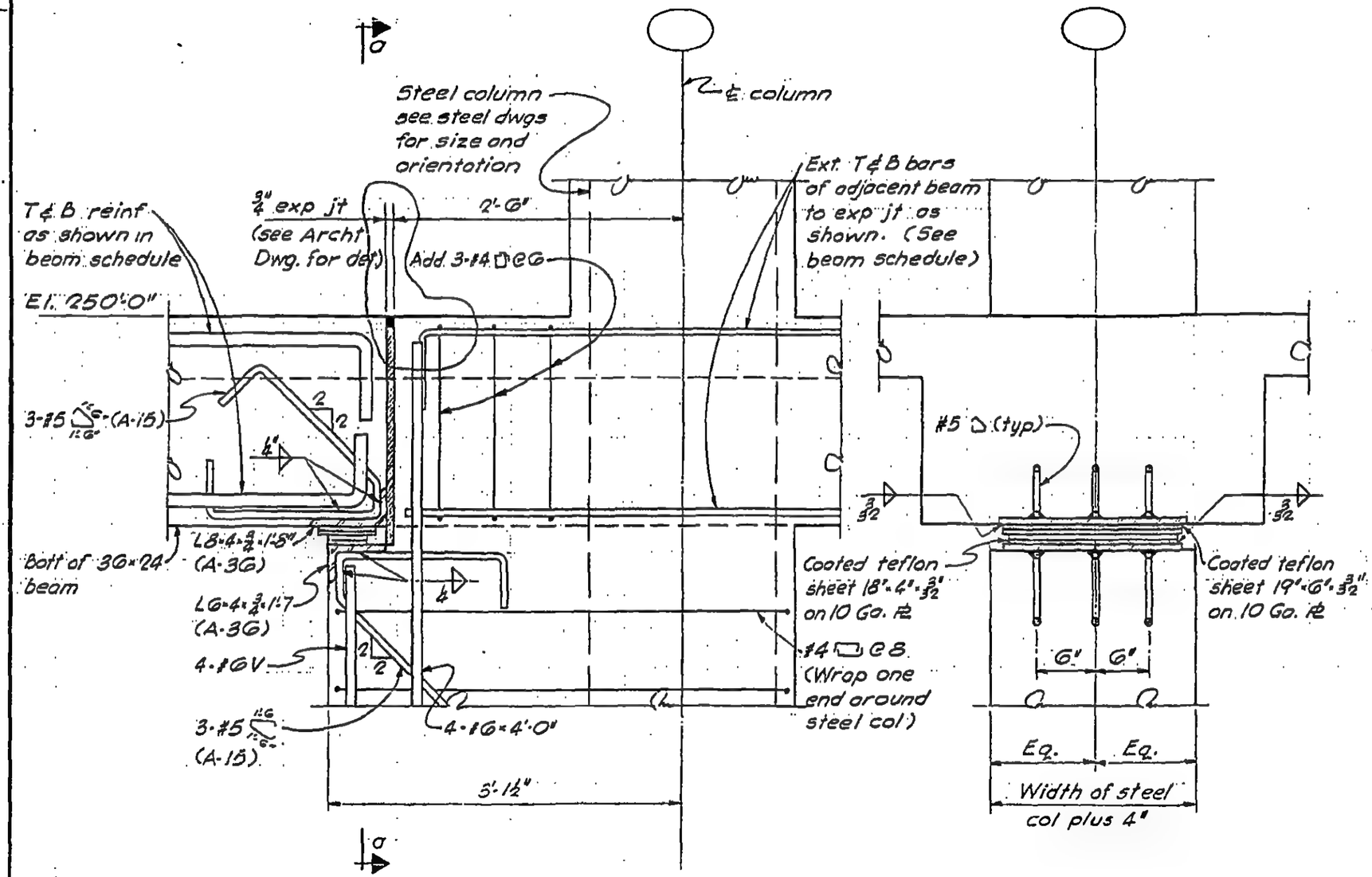

SECTION R-R
(1"=1'-0")

Section 0-0
(1"=1'-0")

LICENSED PROFESSIONAL ENGINEER — LESLIE E. ROBERTSON — No. 34360 — UNIVERSITY OF THE STATE OF NEW YORK

DESIGNED

DRAWN G. K.

REVIEWED E. L.

8-JK7-6.11

SKILLING, HELLE, CHRISTIANSEN, ROBERTSON — Structural & Civil Engineers

PROJECT: THE WORLD TRADE CENTER | TITLE: PATH SECTIONS | DATE: 12-22-69

REVISIONS

5-28-70

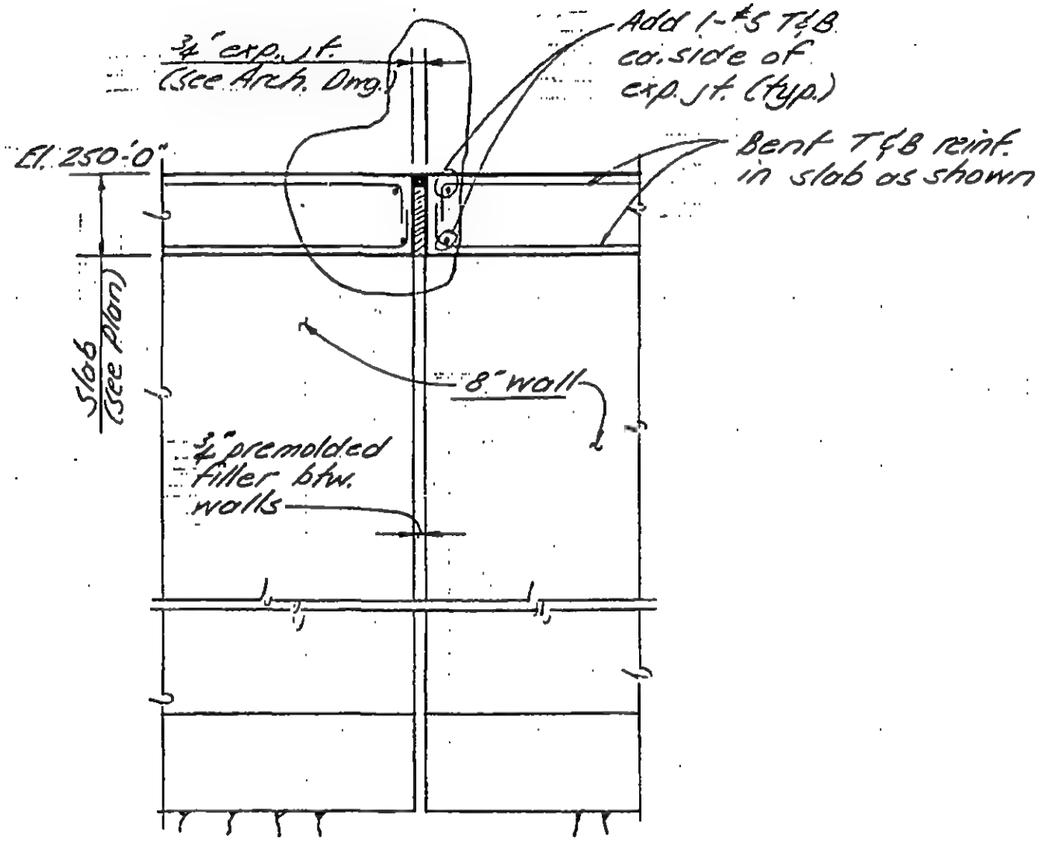

Section 5-5
(1"=1'-0")

LICENSED PROFESSIONAL ENGINEER
LESLIE E. ROBERTSON
No 34360
UNIVERSITY OF THE STATE OF NEW YORK

DESIGNED

DRAWN J. Williams

REVIEWED E.L.

8-JK7-6.12

SKILLING, HELLE, CHRISTIANSEN, ROBERTSON — Structural & Civil Engineers

PROJECT: THE WORLD TRADE CENTER | TITLE: PATH SECTIONS | DATE: 12-22-69

REVISIONS

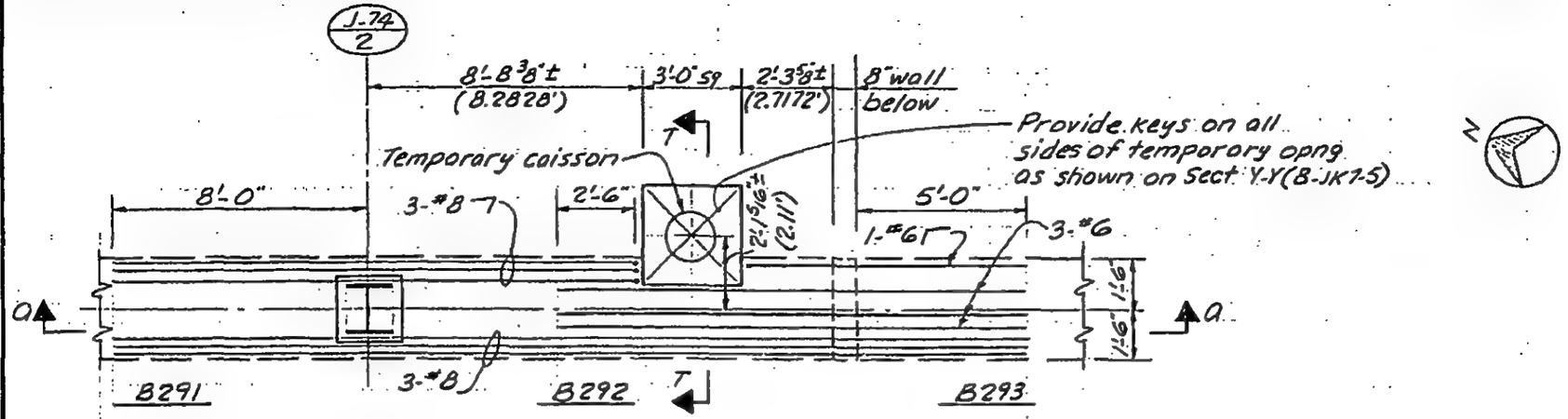

PLAN SHOWING TOP BARS
(1/4" = 1'-0")

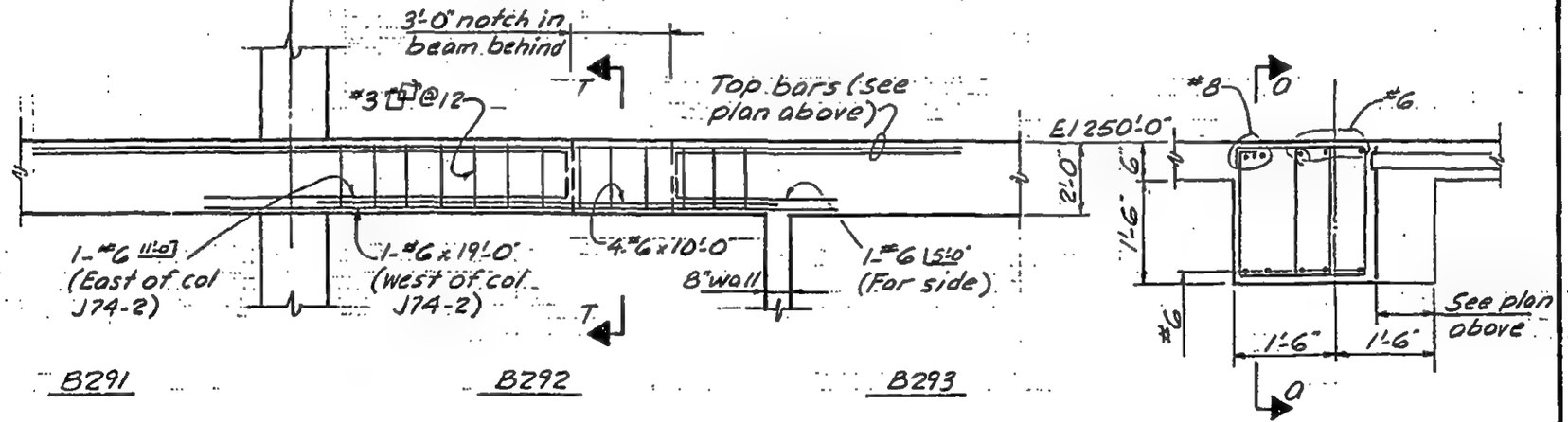

SECTION A-A
(1/4" = 1'-0")

SECTION T-T
(1/2" = 1'-0")
(See plan above for top bars)

LICENSED PROFESSIONAL ENGINEER — LESLIE E. ROBERTSON — No. 34360 — UNIVERSITY OF THE STATE OF NEW YORK

DESIGNED: E. LIU
DRAWN: A. FRANQUI
REVIEWED:

8-JK7-6.13

SKILLING, HELLE, CHRISTIANSEN, ROBERTSON — Structural & Civil Engineers

PROJECT THE WORLD TRADE CENTER | TITLE PATH SECTIONS | DATE 2-25-70

REVISIONS

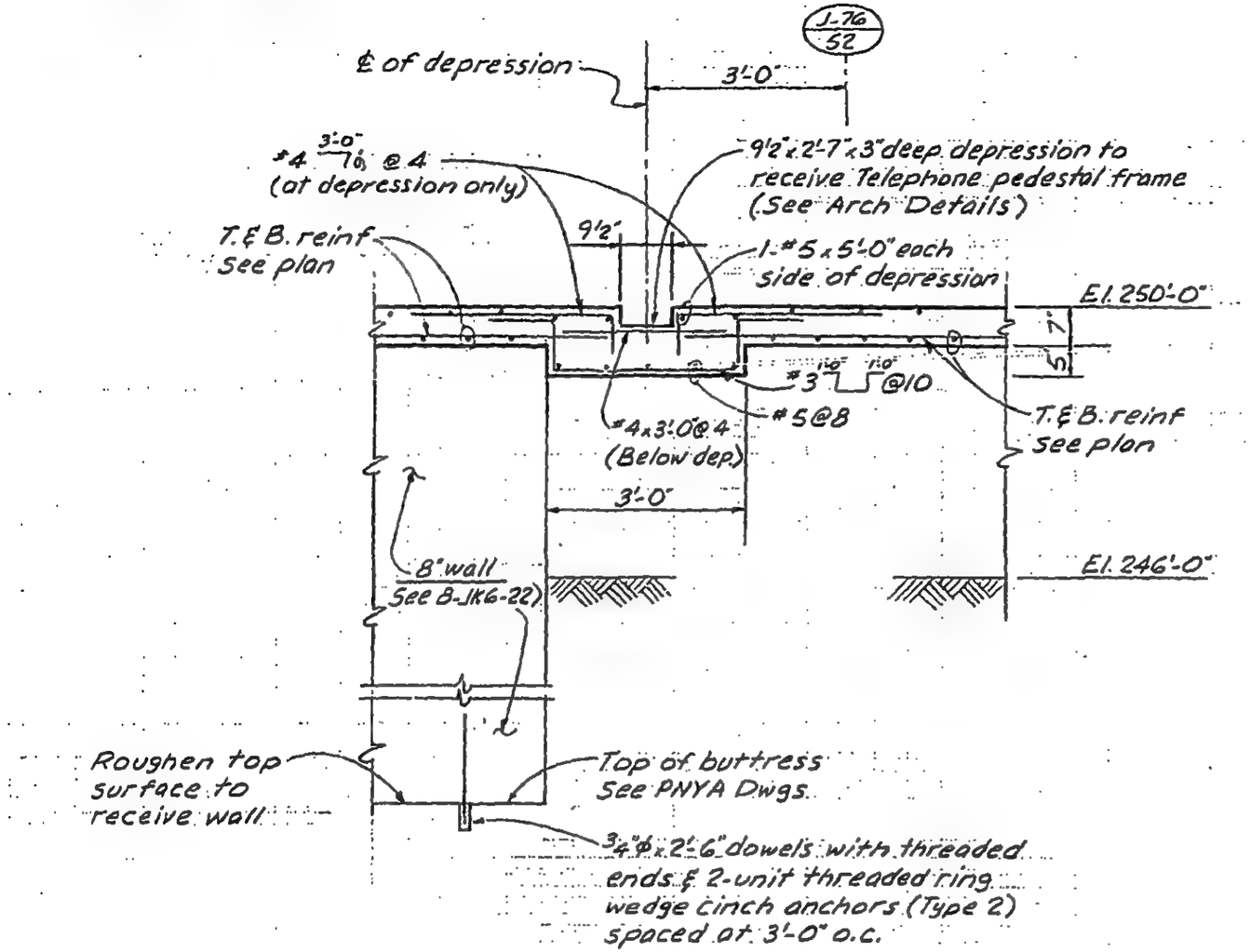

SECTION U-U

LICENSED PROFESSIONAL ENGINEER — LESLIE E. ROBERTSON — No 34360 — UNIVERSITY OF THE STATE OF NEW YORK

DESIGNED K.H.

DRAWN A.L.F.

REVIEWED E.L.

½" = 1'-0"

8-JK7-6.14

SKILLING, HELLE, CHRISTIANSEN, ROBERTSON — Structural & Civil Engineers

PROJECT: THE WORLD TRADE CENTER | TITLE: PATH SECTIONS | DATE: 2-25-70

REVISIONS

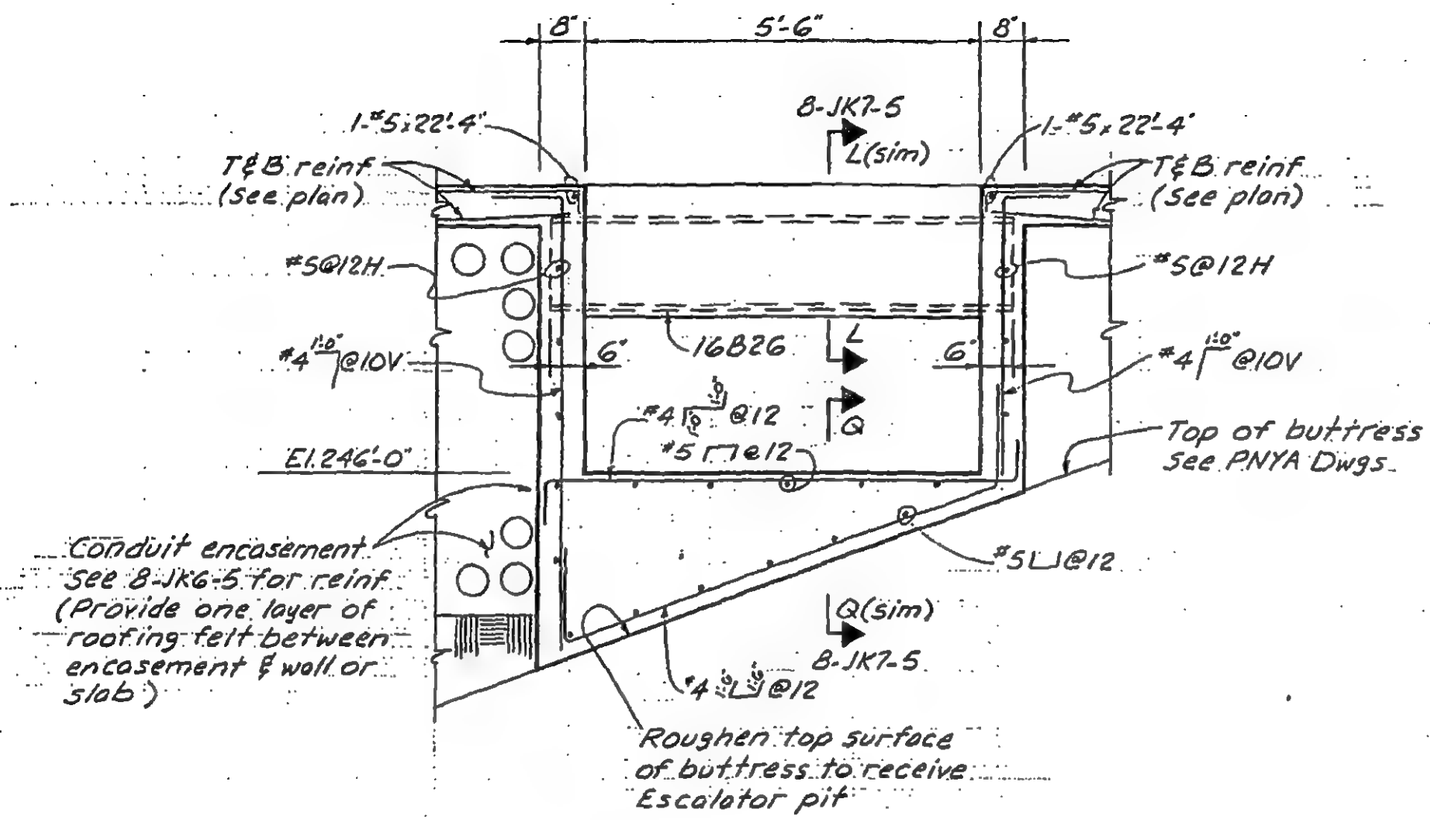

SECTION V-V

LICENSED PROFESSIONAL ENGINEER — LESLIE E. ROBERTSON — No. 34360 — UNIVERSITY OF THE STATE OF NEW YORK

DESIGNED K.H

DRAWN A.L.F

REVIEWED E.L.

1/2"=1'-0"

8-JK7-6.15

SKILLING, HELLE, CHRISTIANSEN, ROBERTSON · Structural & Civil Engineers

PROJECT THE WORLD TRADE CENTER | TITLE PATH SECTIONS | DATE 3-4-70

REVISIONS

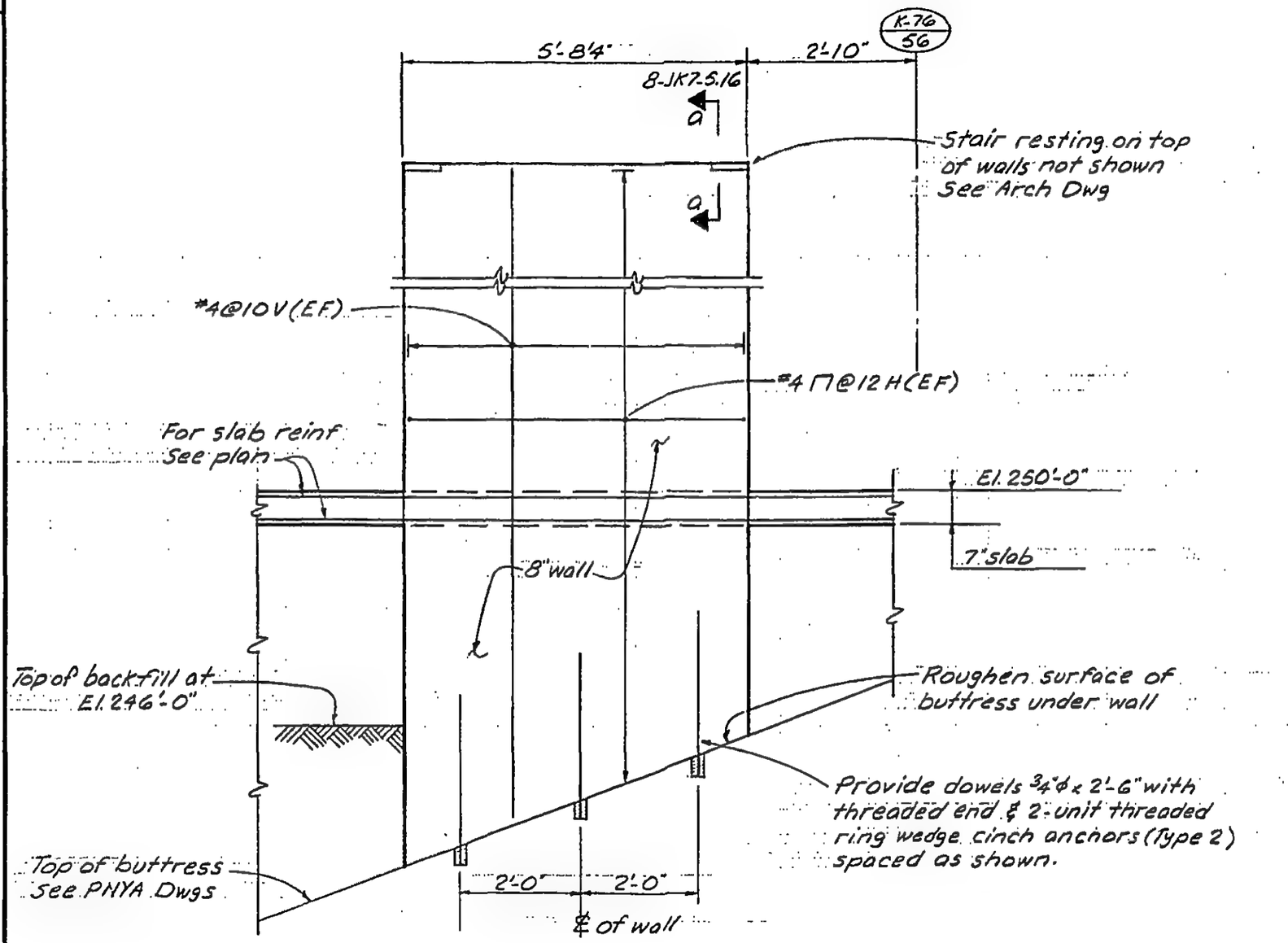

SECTION W-W
(1"=1'-0")

Note:
Provide opng in 8" wall for duct bank (12 conduits)

LICENSED PROFESSIONAL ENGINEER
LESLIE E. ROBERTSON
No. 34360
UNIVERSITY OF THE STATE OF NEW YORK

DESIGNED K.H.
DRAWN A.L.F.
REVIEWED E.L.

8-JK7-6.16

SKILLING, HELLE, CHRISTIANSEN, ROBERTSON — Structural & Civil Engineers

PROJECT THE WORLD TRADE CENTER | TITLE PATH SECTIONS | DATE 3-13-70

REVISIONS

3-23-70

3-25-71

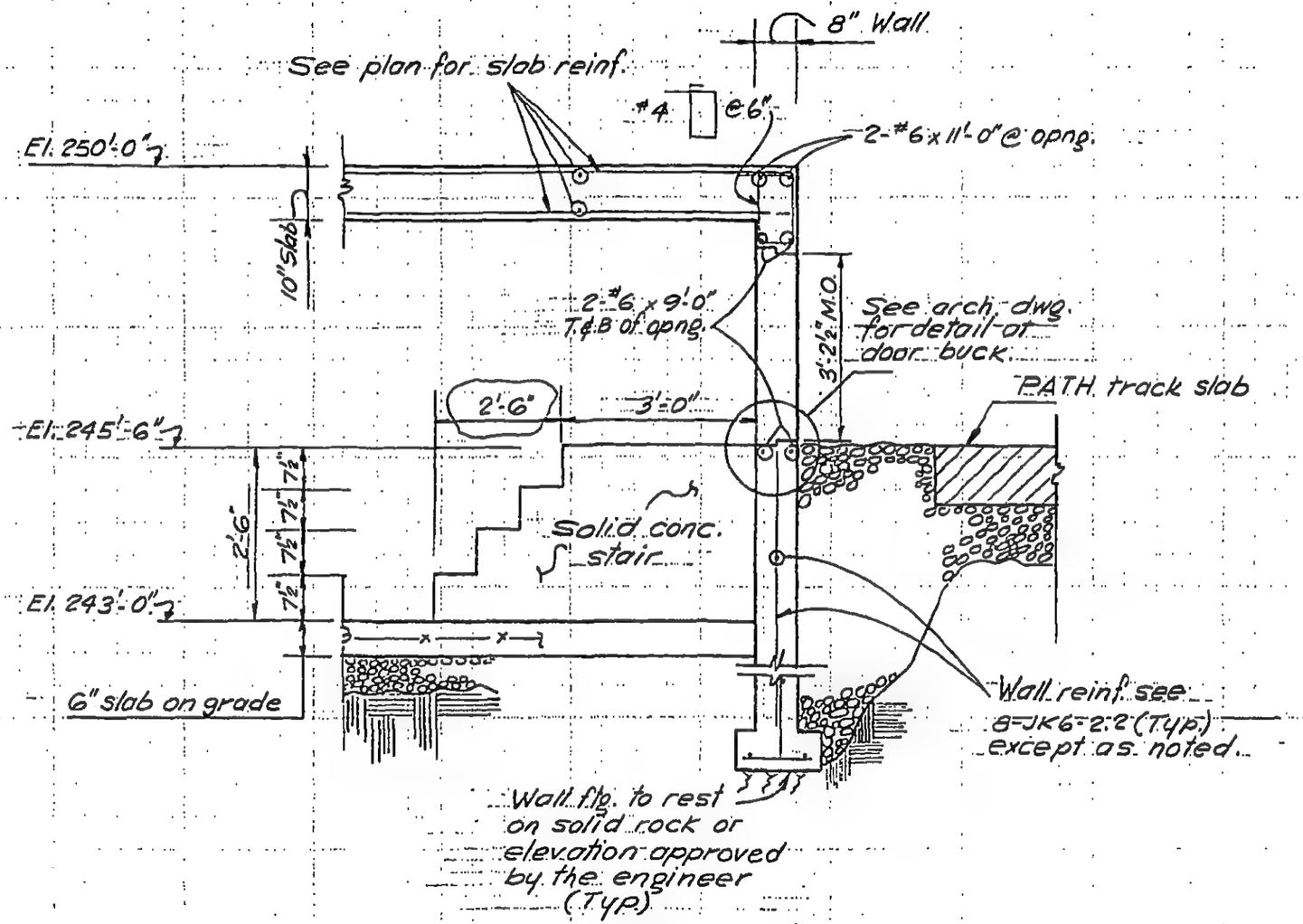

Section X-X

(1/2"=1'-0")

LICENSED PROFESSIONAL ENGINEER LESLIE E. ROBERTSON NO. 34360 UNIVERSITY OF THE STATE OF NEW YORK

DESIGNED

DRAWN V.H.A.

REVIEWED K.H. & E.L.

8-JK7-6.17

SKILLING, HELLE, CHRISTIANSEN, ROBERTSON — Structural & Civil Engineers

PROJECT THE WORLD TRADE CENTER | TITLE PATH SECTIONS | DATE 3-13-70

REVISIONS

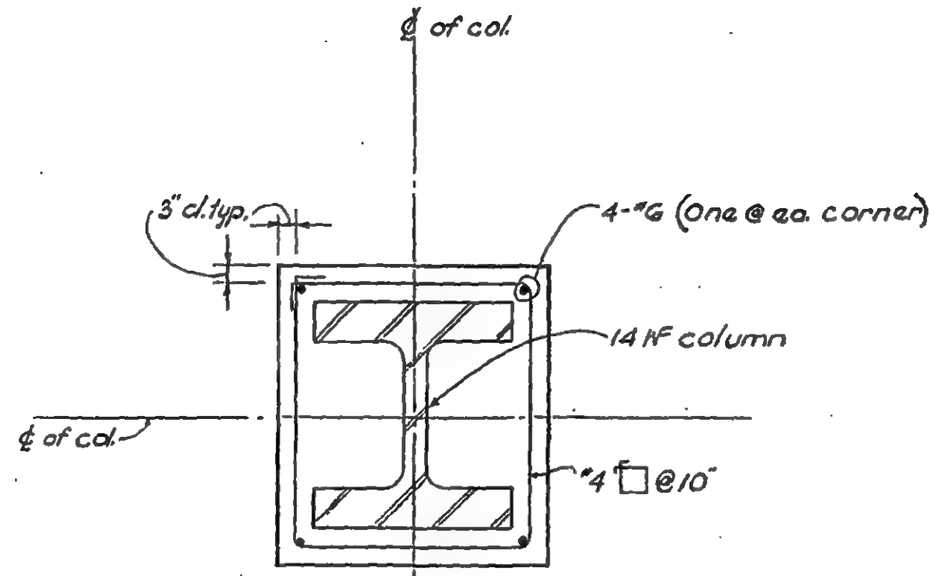

SECTION Y-Y (1"-1'-0")

All reinf. shown are from top of ftg. to El. 250'-0"

LICENSED PROFESSIONAL ENGINEER
LESLIE E. ROBERTSON
NO. 34360
UNIVERSITY OF THE STATE OF NEW YORK

DESIGNED

DRAWN D. Huggins

REVIEWED E.L.

8-1K7-G.1R

SKILLING, HELLE, CHRISTIANSEN, ROBERTSON — Structural & Civil Engineers

PROJECT: THE WORLD TRADE CENTER | TITLE: PATH SECTIONS | DATE: 3-25-70

REVISIONS

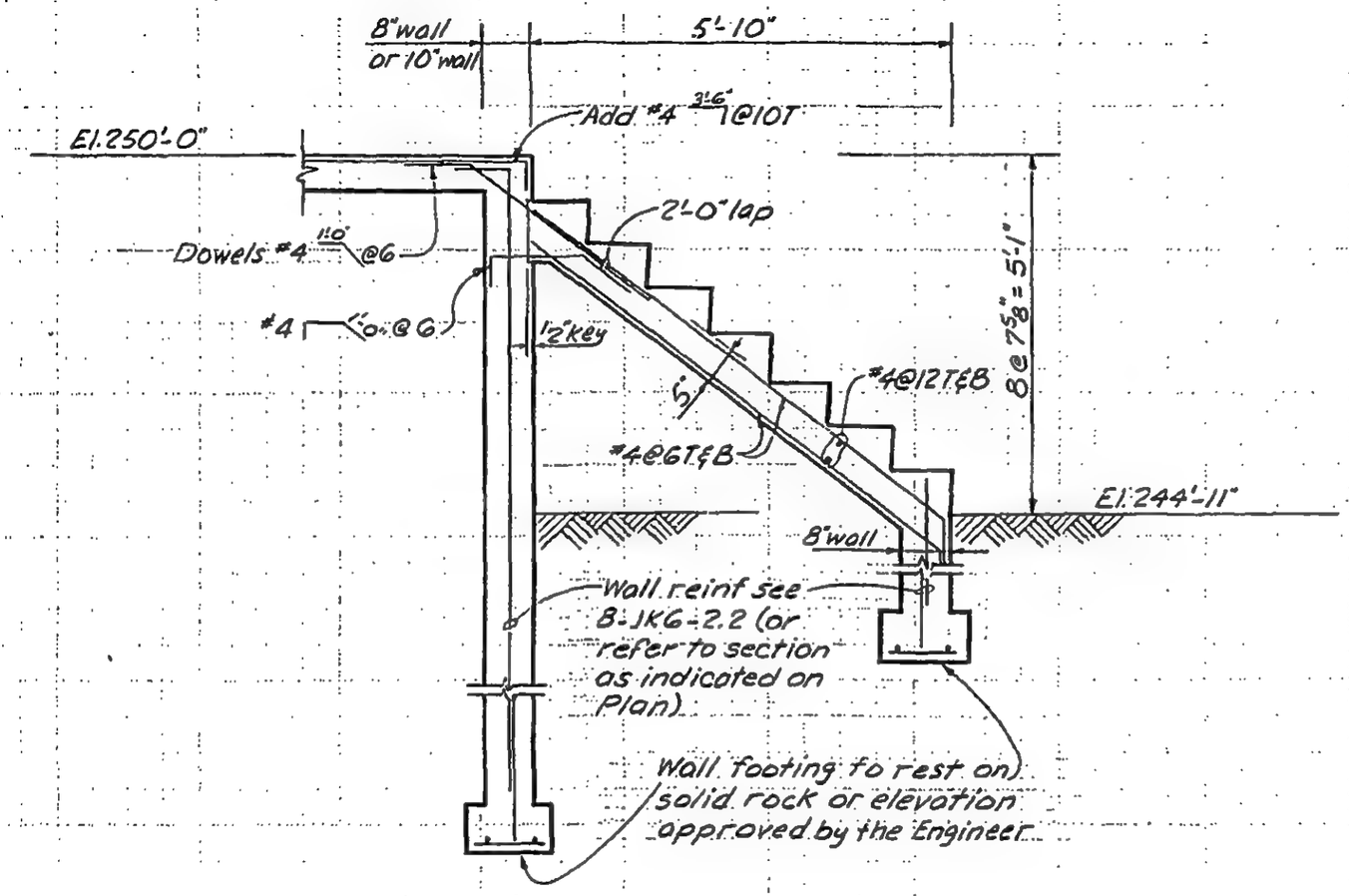

SECTION Z-Z

(1/2" = 1'-0")

LICENSED PROFESSIONAL ENGINEER — LESLIE E. ROBERTSON — No. 34360 — UNIVERSITY OF THE STATE OF NEW YORK

DESIGNED

DRAWN A.F.

REVIEWED E.L.

8-JK7-6.19

SKILLING, HELLE, CHRISTIANSEN, ROBERTSON — Structural & Civil Engineers

PROJECT: THE WORLD TRADE CENTER | TITLE: SECTIONS AT El. 264' | DATE: 5-1-68

REVISIONS

7/10/69 GEN. REV.

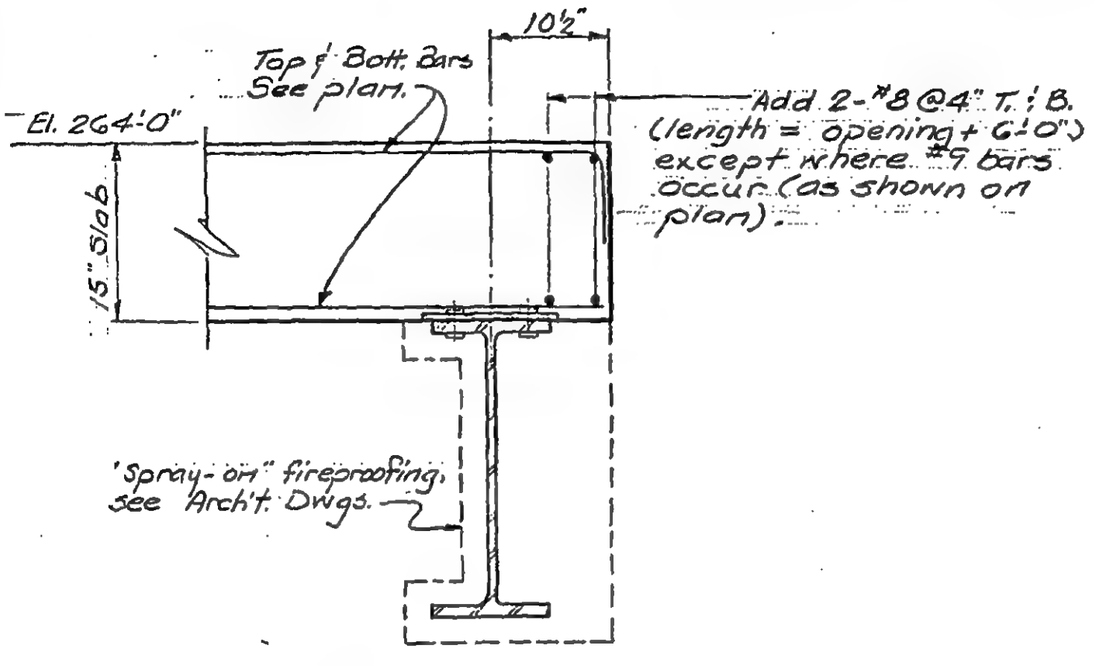

Section M-M
(1" = 1'-0")

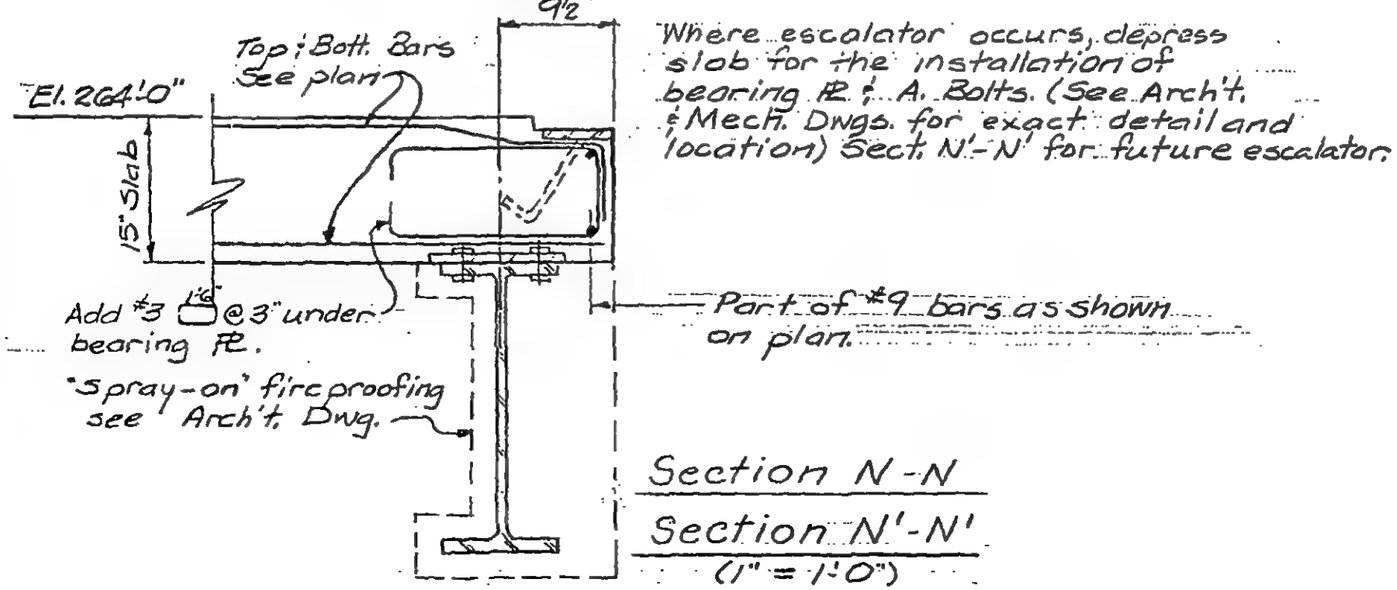

Section N-N

Section N'-N'
(1" = 1'-0")

LICENSED PROFESSIONAL ENGINEER — LESLIE E. ROBERTSON — No. 34360 — UNIVERSITY OF THE STATE OF NEW YORK

DESIGNED

DRAWN: G. STANTON

REVIEWED: E.L.

SKILLING, HELLE, CHRISTIANSEN, ROBERTSON — Structural & Civil Engineers

PROJECT: THE WORLD TRADE CENTER | TITLE: SECTION AT EL. 264' | DATE: 2-25-69

REVISIONS

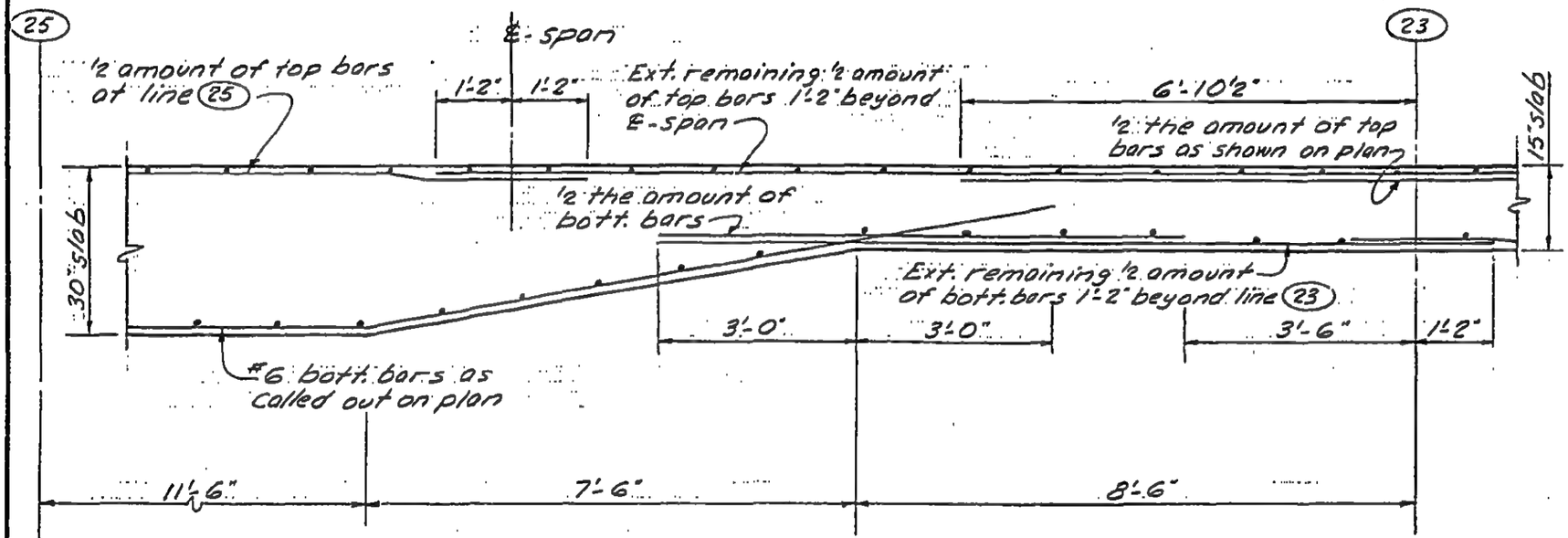

Section P-P

LICENSED PROFESSIONAL ENGINEER — LESLIE E. ROBERTSON — No. 34360 — UNIVERSITY OF THE STATE OF NEW YORK

DESIGNED E. L.

DRAWN A. L. F.

REVIEWED

8-JK7-7.7

SKILLING, HELLE, CHRISTIANSEN, ROBERTSON · Structural & Civil Engineers

PROJECT THE WORLD TRADE CENTER | TITLE SECTION AT ELEV. 264' | DATE 4-2-69

REVISIONS

7-10-69

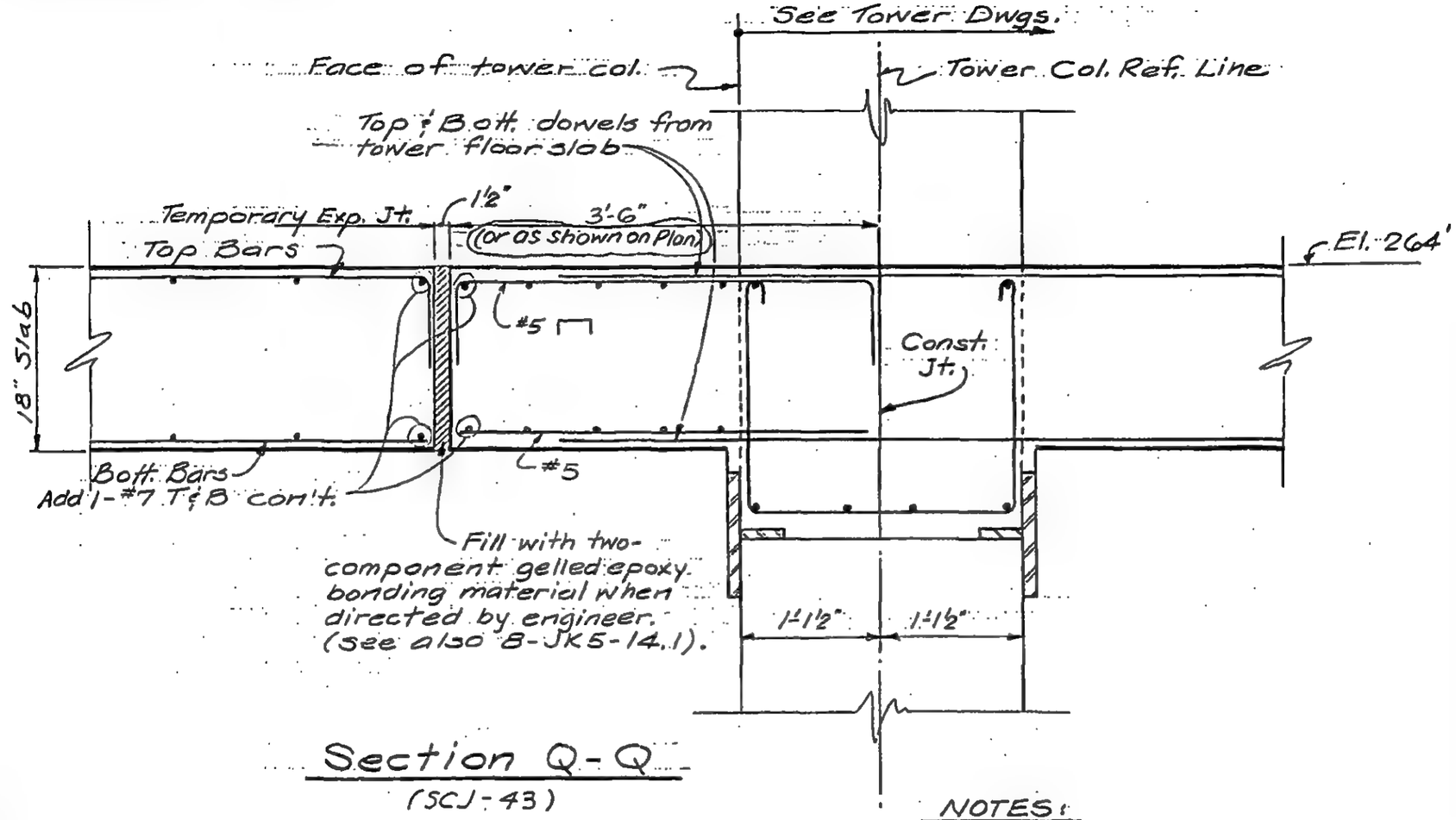

Section Q-Q
(SCJ-43)

NOTES:
1) See also 8-JK5-14.1.

LICENSED PROFESSIONAL ENGINEER
LESLIE E. ROBERTSON
No. 34360
UNIVERSITY OF THE STATE OF NEW YORK

DESIGNED

DRAWN G.J.S.

REVIEWED E.L.

8-JK7-7.8

SKILLING, HELLE, CHRISTIANSEN, ROBERTSON — Structural & Civil Engineers

PROJECT: THE WORLD TRADE CENTER | TITLE: SECTION AT El. 264' | DATE: 4-9-69

REVISIONS

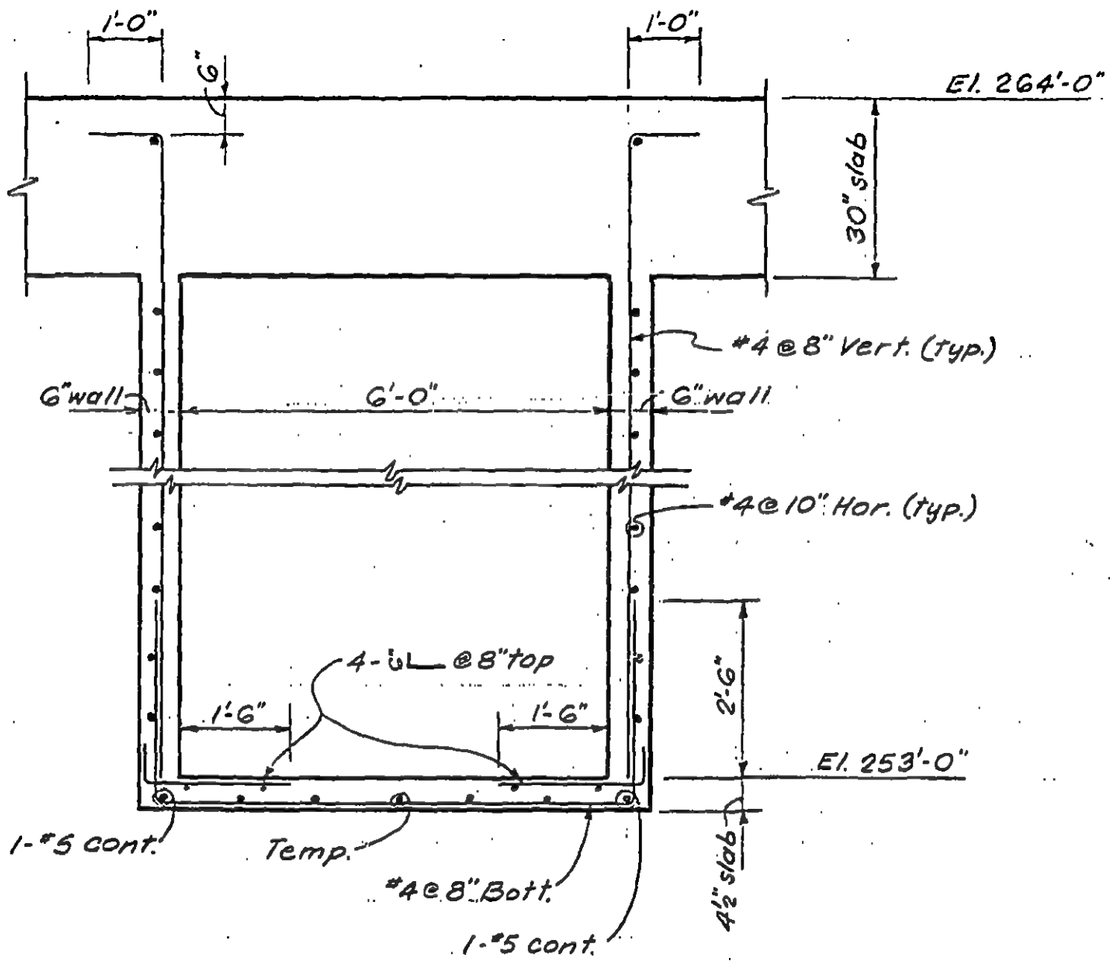

Section R-R
(SCK-46)

LICENSED PROFESSIONAL ENGINEER
LESLIE E. ROBERTSON
No. 34360
UNIVERSITY OF THE STATE OF NEW YORK

DESIGNED

DRAWN
S.C.

REVIEWED
E.L.

8-JK7-7.9

SKILLING, HELLE, CHRISTIANSEN, ROBERTSON — Structural & Civil Engineers

PROJECT: THE WORLD TRADE CENTER | TITLE: SECTION AT EL. 264' | DATE: 4-9-69

REVISIONS

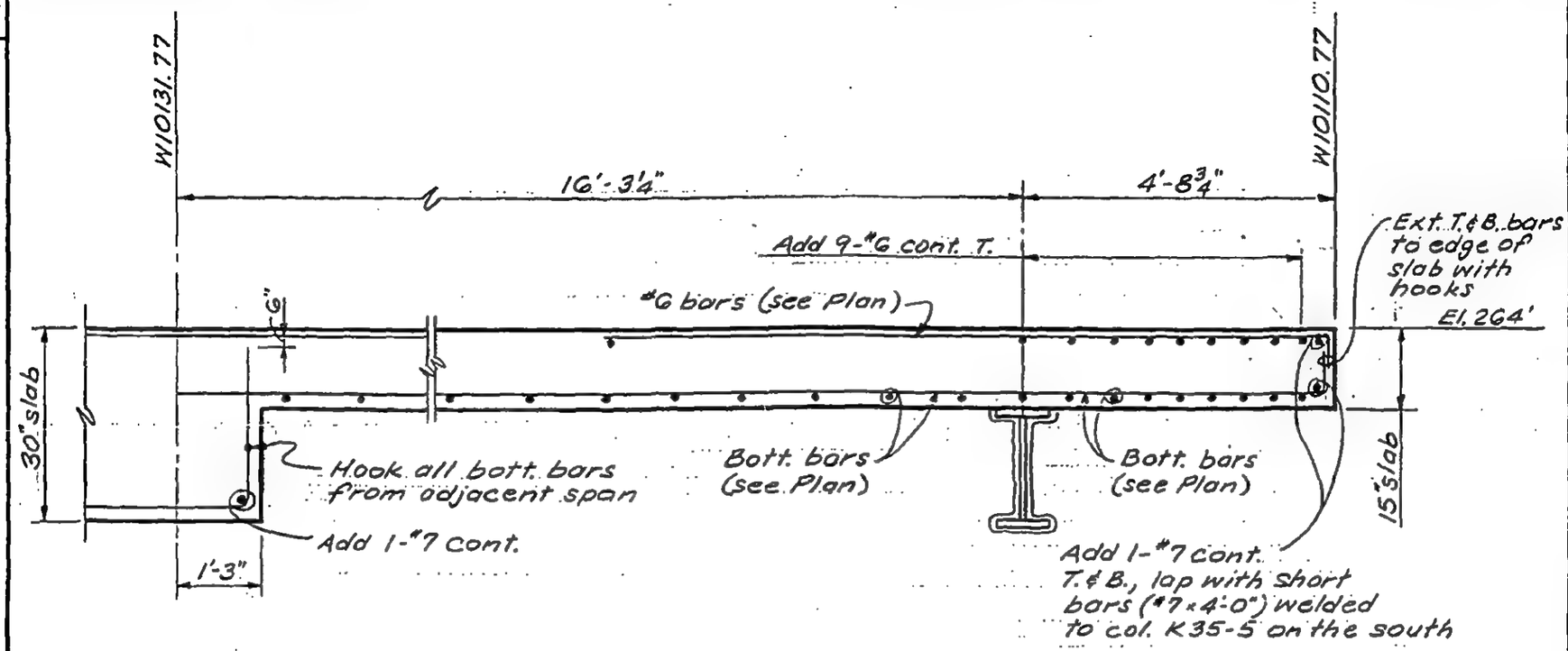

Section S-S
(SCK-46)

LICENSED PROFESSIONAL ENGINEER
LESLIE E. ROBERTSON
No. 34360
UNIVERSITY OF THE STATE OF NEW YORK

DESIGNED

DRAWN
S.C.

REVIEWED
E.L.

8-JK7-7.10

SKILLING, HELLE, CHRISTIANSEN, ROBERTSON — Structural & Civil Engineers

PROJECT: THE WORLD TRADE CENTER | TITLE: SECTION AT EL 264'-0" | DATE: 6-26-69

REVISIONS

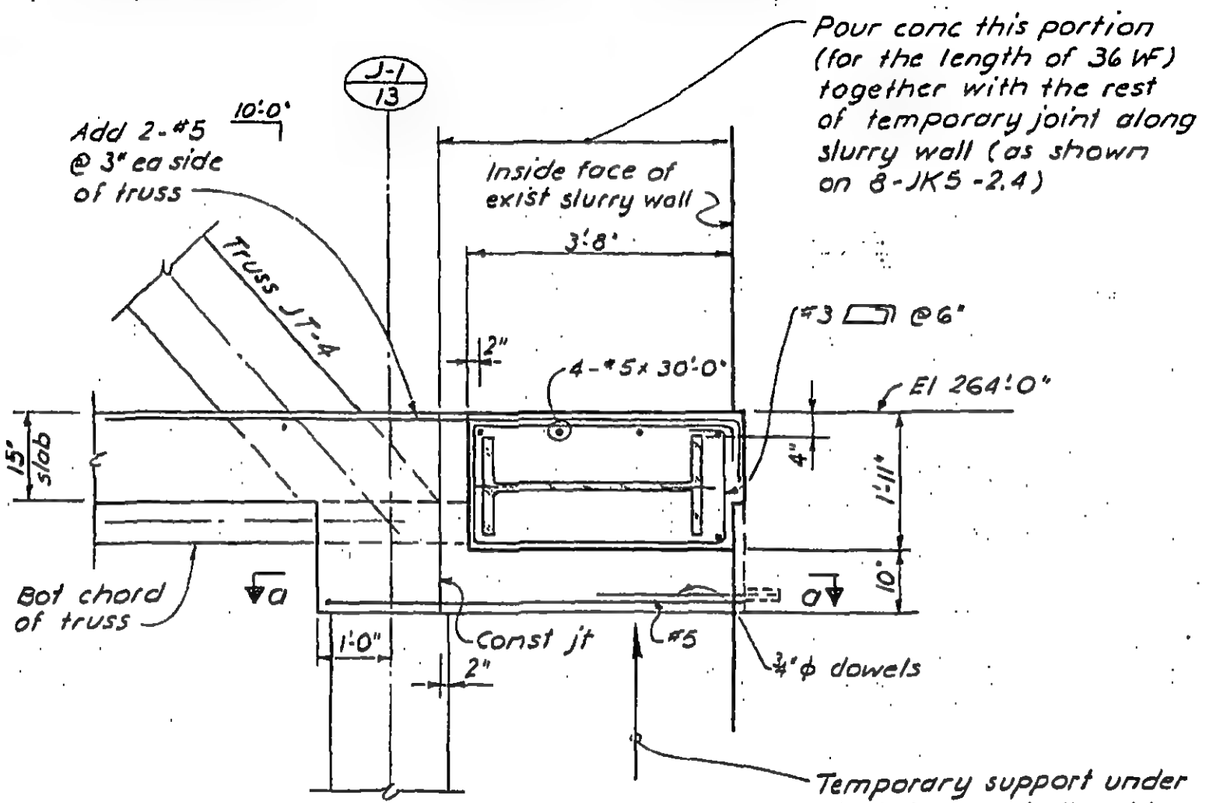

Section T-T
(½" = 1'-0")

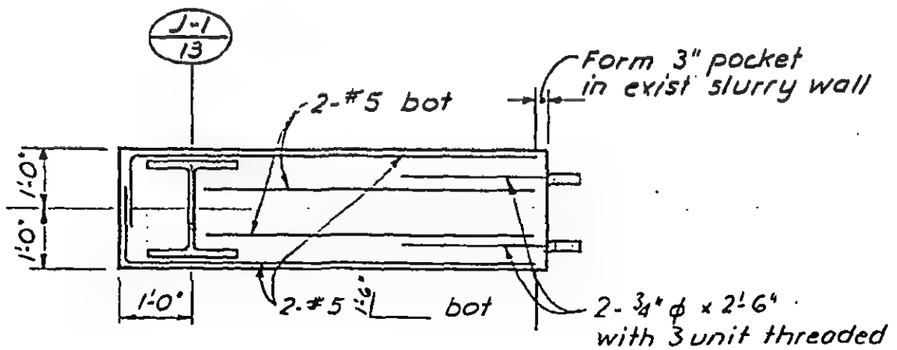

Section a-a
(½" = 1'-0")

LICENSED PROFESSIONAL ENGINEER
LESLIE E. ROBERTSON
No. 34360
UNIVERSITY OF THE STATE OF NEW YORK

DESIGNED

DRAWN F. Smith

REVIEWED E.L.

8-JK7-7.11

SKILLING, HELLE, CHRISTIANSEN, ROBERTSON — Structural & Civil Engineers

PROJECT THE WORLD TRADE CENTER | TITLE SECTIONS AT EL. 264'-0" | DATE 7/10/69

REVISIONS

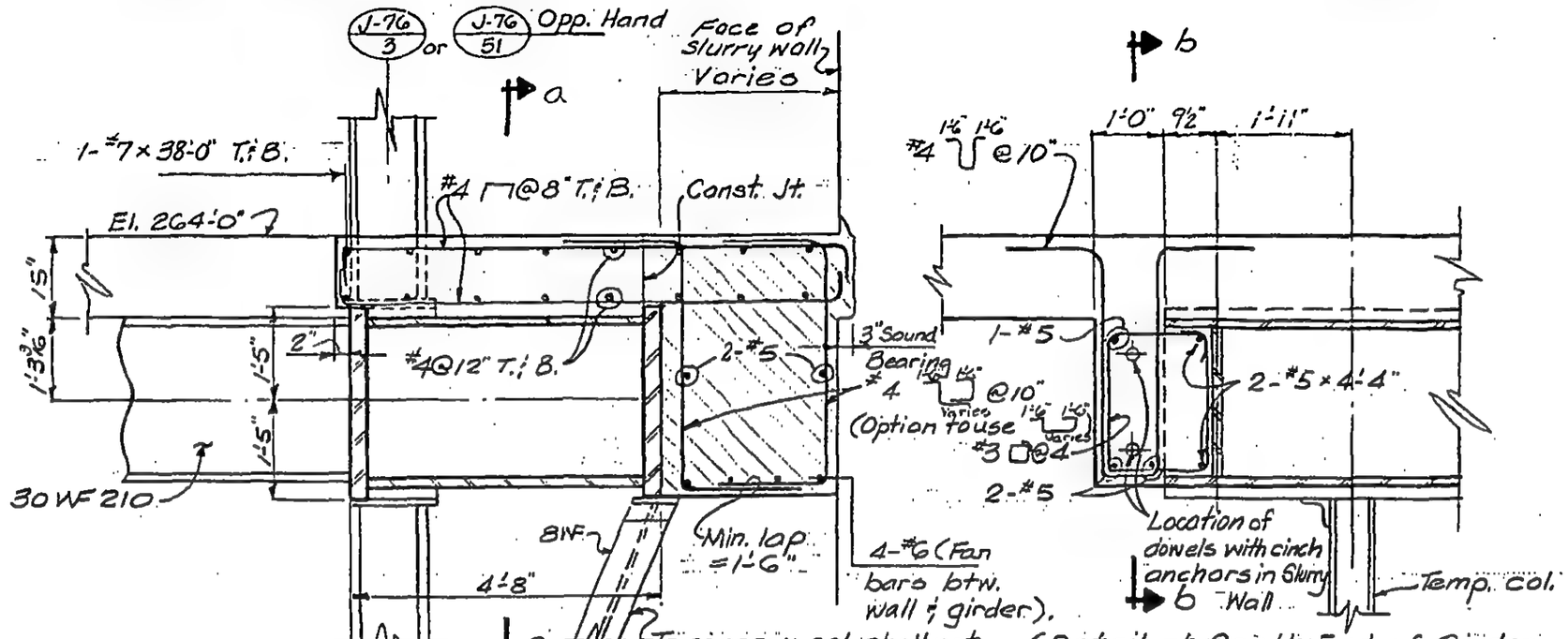

Section U-U
(½" = 1'-0")

Section a-a
(½" = 1'-0")

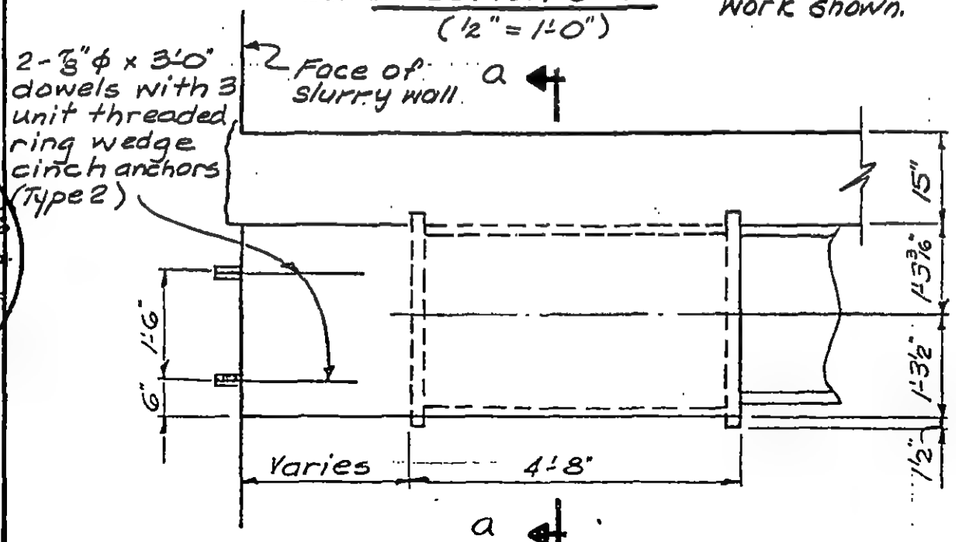

Section b-b
(½" = 1'-0")

NOTES:

1.) All concrete to have $f_c' = 4000$ psi.
2.) Shaded area shall be poured together with the joint btw. floor and slurry wall as shown on Detail 8-JK5-2.4. Contractors option to pour this whole area over top of steel girder at a later stage.
3.) See 8-JK5-2.4 for further notes refering keys cut in slurry wall.

LICENSED PROFESSIONAL ENGINEER — LESLIE E. ROBERTSON — No. 34360 — UNIVERSITY OF THE STATE OF NEW YORK

DESIGNED

DRAWN G. STANTON

REVIEWED E.L.

8-JK7-7.12

SKILLING, HELLE, CHRISTIANSEN, ROBERTSON — Structural & Civil Engineers

PROJECT THE WORLD TRADE CENTER | TITLE SECTIONS AT EL. 264'-0" | DATE 8-13-69

REVISIONS

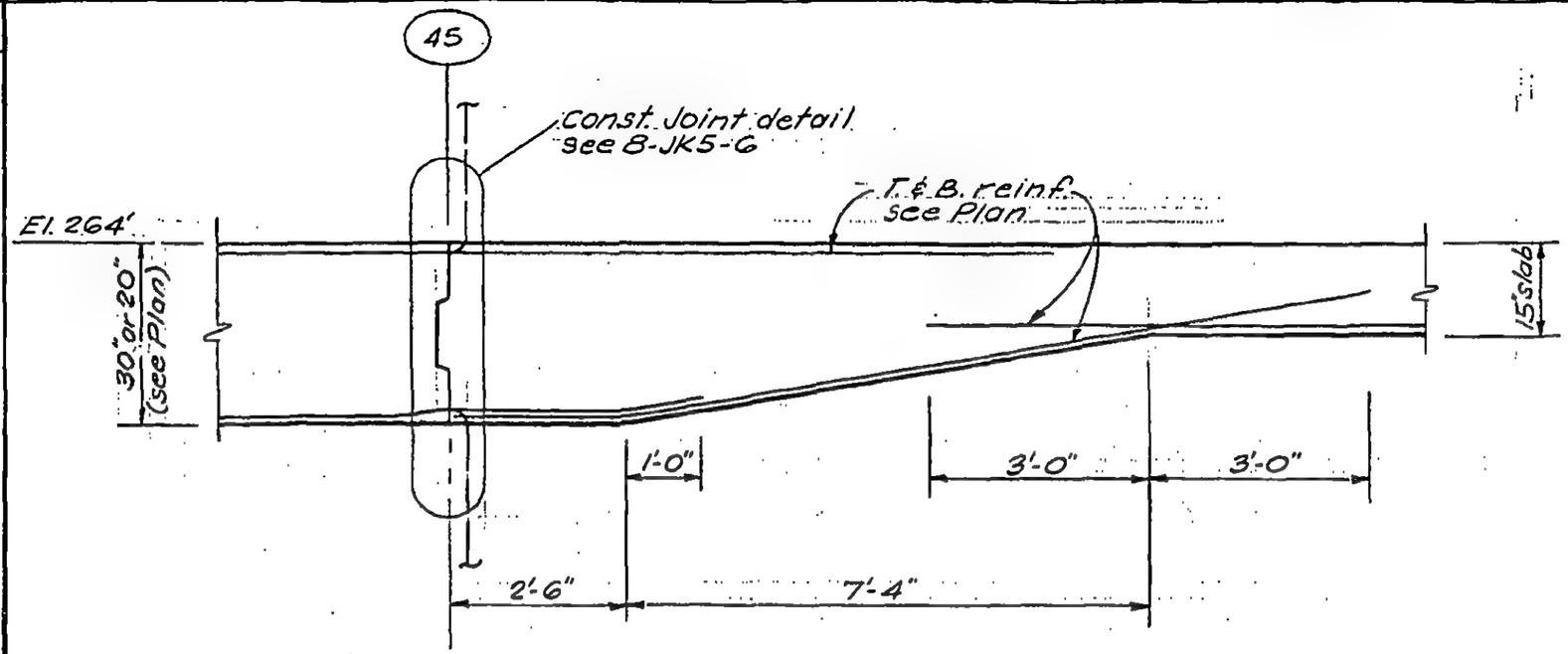

Section V-V
(½" = 1'-0")

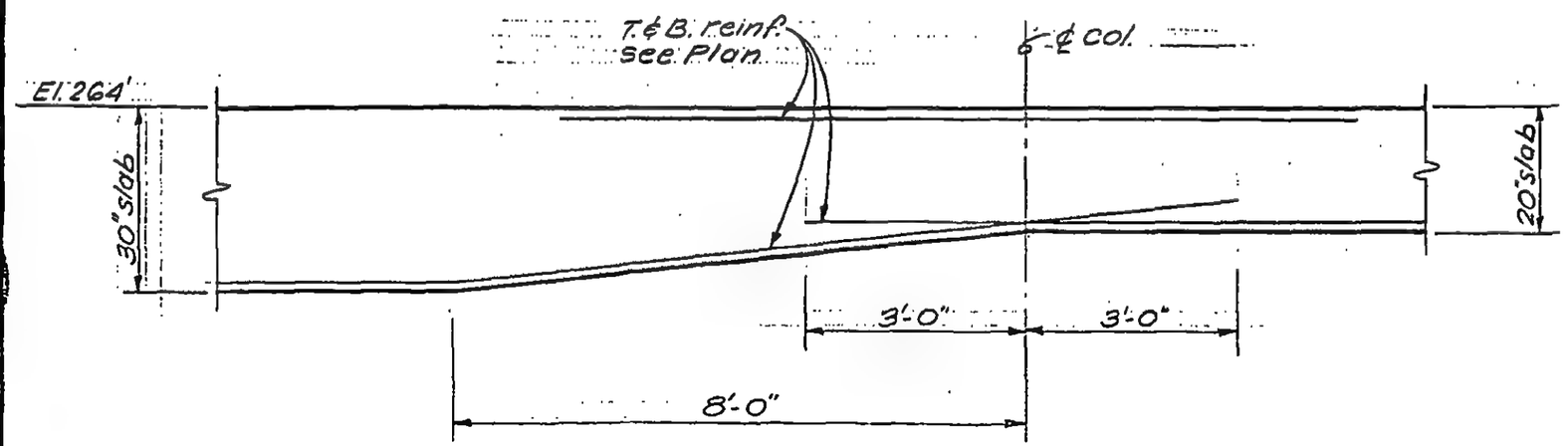

Section W-W
(½" = 1'-0")

LICENSED PROFESSIONAL ENGINEER
LESLIE E. ROBERTSON
No. 34360
UNIVERSITY OF THE STATE OF NEW YORK

DESIGNED

DRAWN S.C.

REVIEWED E.L.

8-JK7-7.13

SKILLING, HELLE, CHRISTIANSEN, ROBERTSON — Structural & Civil Engineers

PROJECT: THE WORLD TRADE CENTER | TITLE: SECTION AT EL. 264'-0" | DATE: 8-13-69

REVISIONS

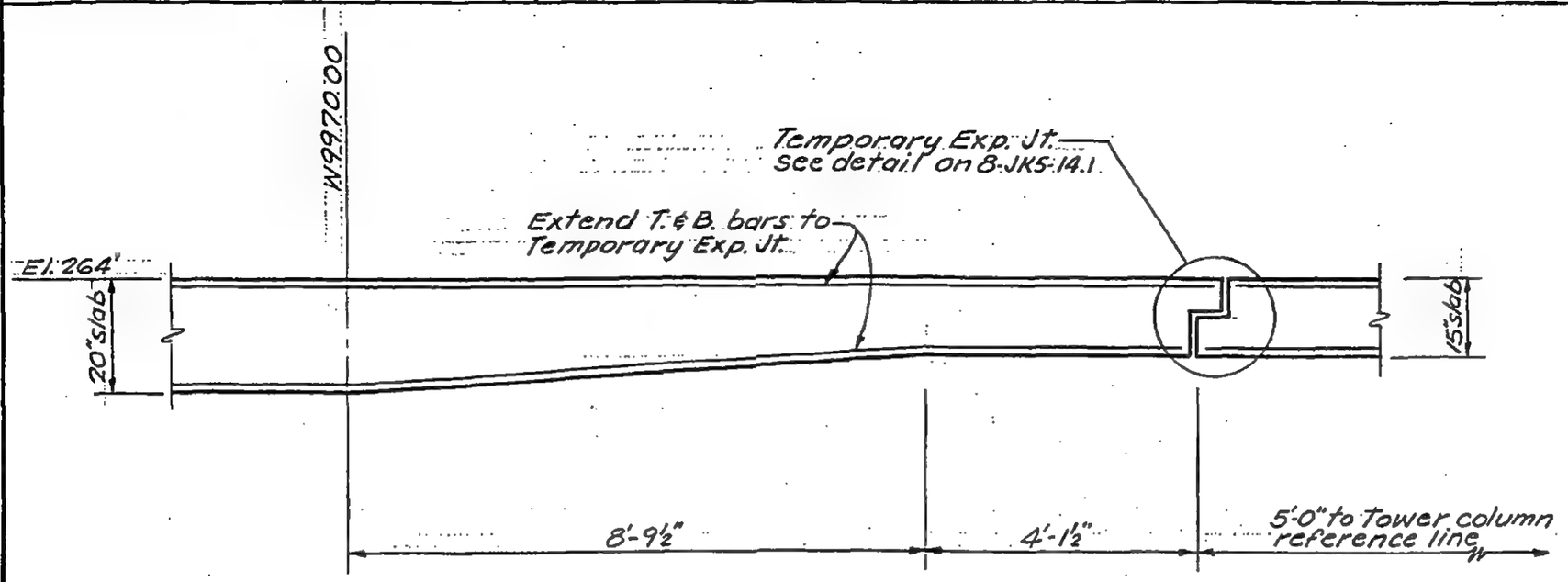

Section X-X
(½"=1'-0")

LICENSED PROFESSIONAL ENGINEER
LESLIE E. ROBERTSON
No. 34360
UNIVERSITY OF THE STATE OF NEW YORK

DESIGNED

DRAWN S.C.

REVIEWED E.L.

8-JK7-7.14

SKILLING, HELLE, CHRISTIANSEN, ROBERTSON — Structural & Civil Engineers

PROJECT: THE WORLD TRADE CENTER | TITLE: EL. 264 —— COIN VAULT | DATE: 4-8-70

REVISIONS

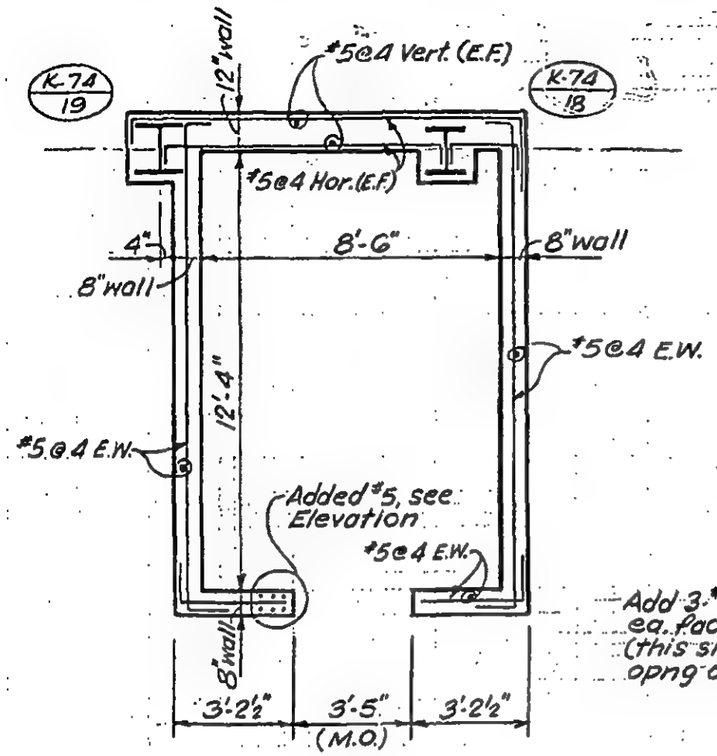

PLAN
(¼"=1'-0")

SECTION a-a
(1"=1'-0")

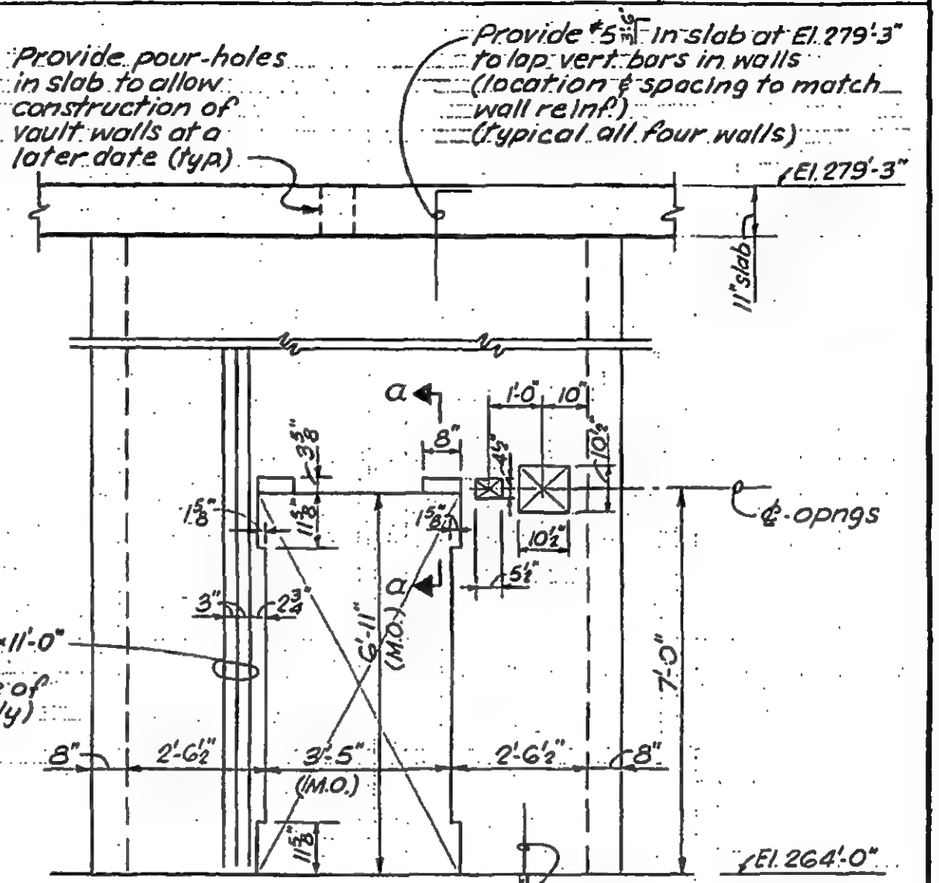

FRONT ELEVATION
(⅜"=1'-0")

NOTES:
1. Refer to the following Dwgs for additional provisions for other trades:
   a.) PNYA Dwg HT-452 (2-10-70)
   b) Holmes Electric Protective Co. Dwgs S-5219 & S-5220 (2-9-70)
2. All concrete — f'c = 3000 psi

LICENSED PROFESSIONAL ENGINEER — LESLIE E. ROBERTSON — No. 34360 — UNIVERSITY OF THE STATE OF NEW YORK

DESIGNED

DRAWN: S.C.

REVIEWED: E.L.

8-JK7-7.15

SKILLING, HELLE, CHRISTIANSEN, ROBERTSON — Structural & Civil Engineers

PROJECT: THE WORLD TRADE CENTER | TITLE: SECTION AT EL 264'-0" | DATE: 9-17-69

REVISIONS

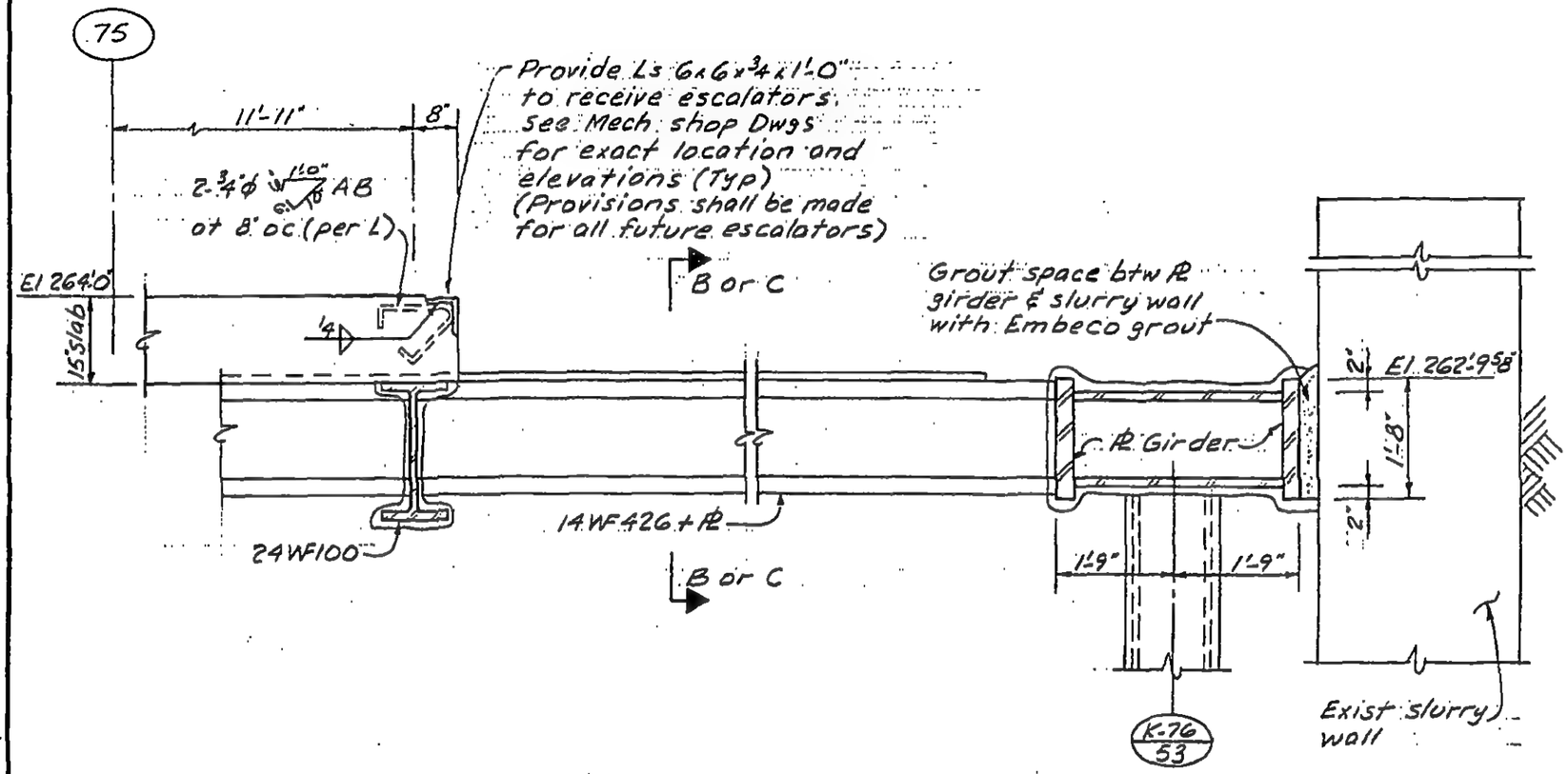

Section A-A
(1"=1'-0")

LICENSED PROFESSIONAL ENGINEER — LESLIE E. ROBERTSON — No. 34360 — UNIVERSITY OF THE STATE OF NEW YORK

DESIGNED

DRAWN: A.F.

REVIEWED: E.L.

8-JK7-8.1

SKILLING, HELLE, CHRISTIANSEN, ROBERTSON — Structural & Civil Engineers

PROJECT: THE WORLD TRADE CENTER | TITLE: SECTIONS AT EL 264'-0" | DATE: 9-17-69

REVISIONS

J-76/52

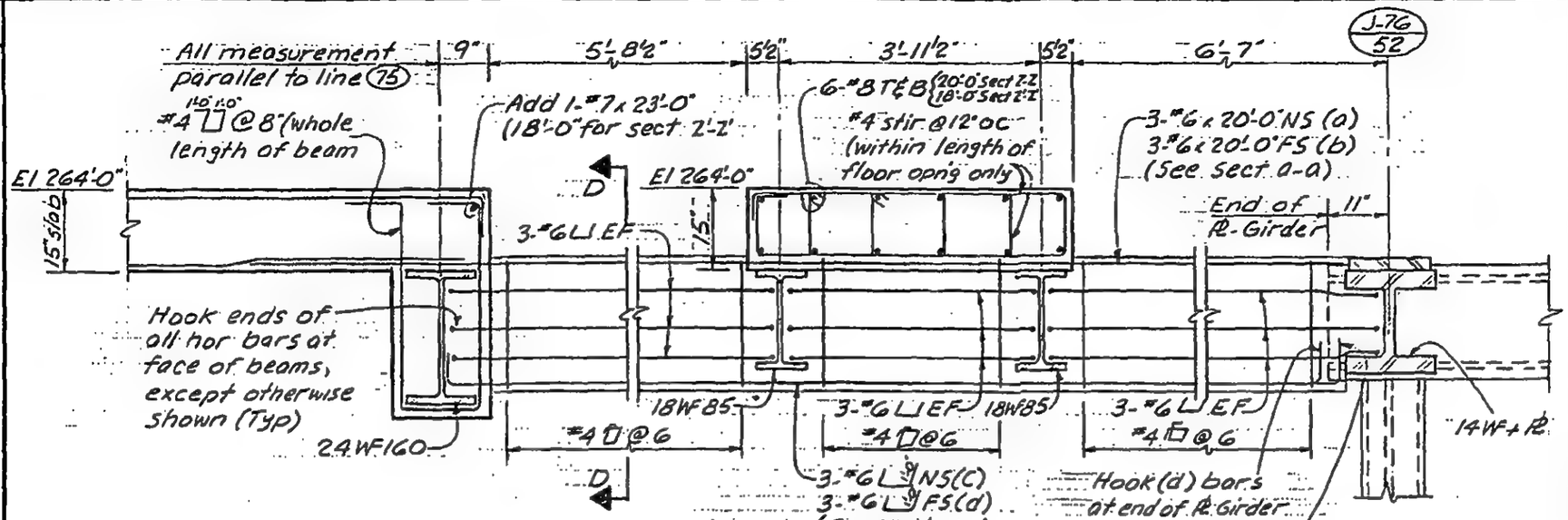

Section B-B

Section C-C (opp hand)

(½" = 1'-0")

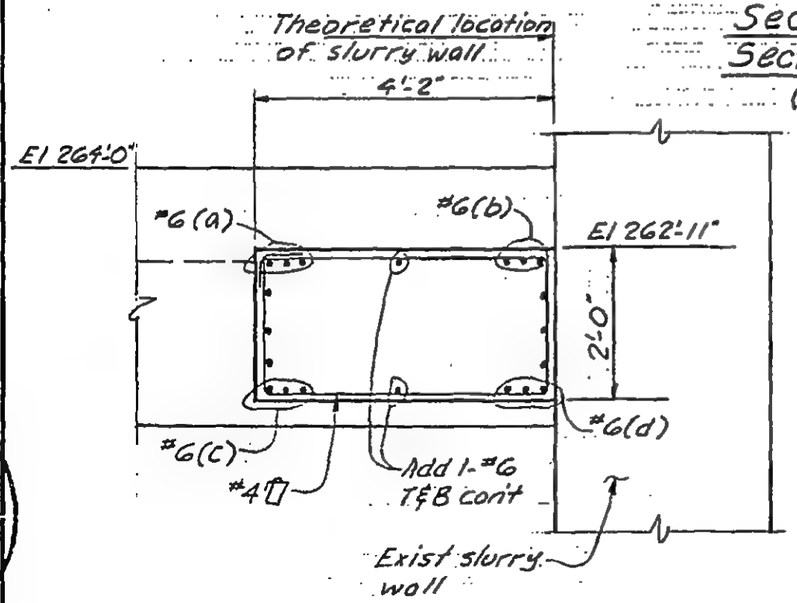

Section D-D

(½" = 1'-0")

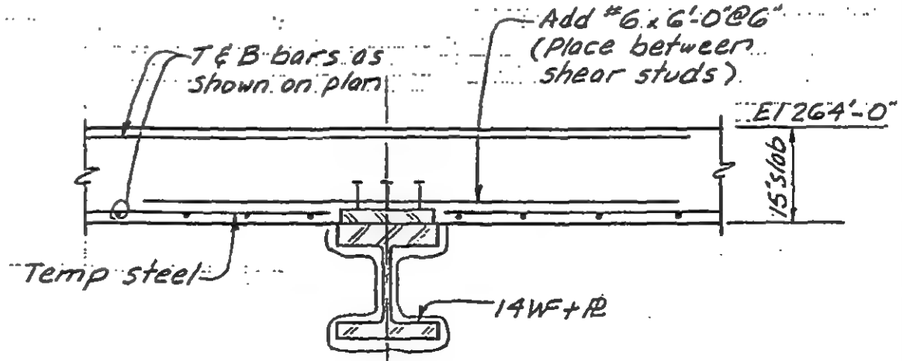

Section E-E

(½" = 1'-0")

LICENSED PROFESSIONAL ENGINEER
LESLIE E. ROBERTSON
No. 34360
UNIVERSITY OF THE STATE OF NEW YORK

DESIGNED

DRAWN: A.F.

REVIEWED: E.L.

8-JK7-8.2

SKILLING, HELLE, CHRISTIANSEN, ROBERTSON — Structural & Civil Engineers

PROJECT THE WORLD TRADE CENTER | TITLE SECTION AT EL. 264'-0" | DATE 11-5-69

REVISIONS

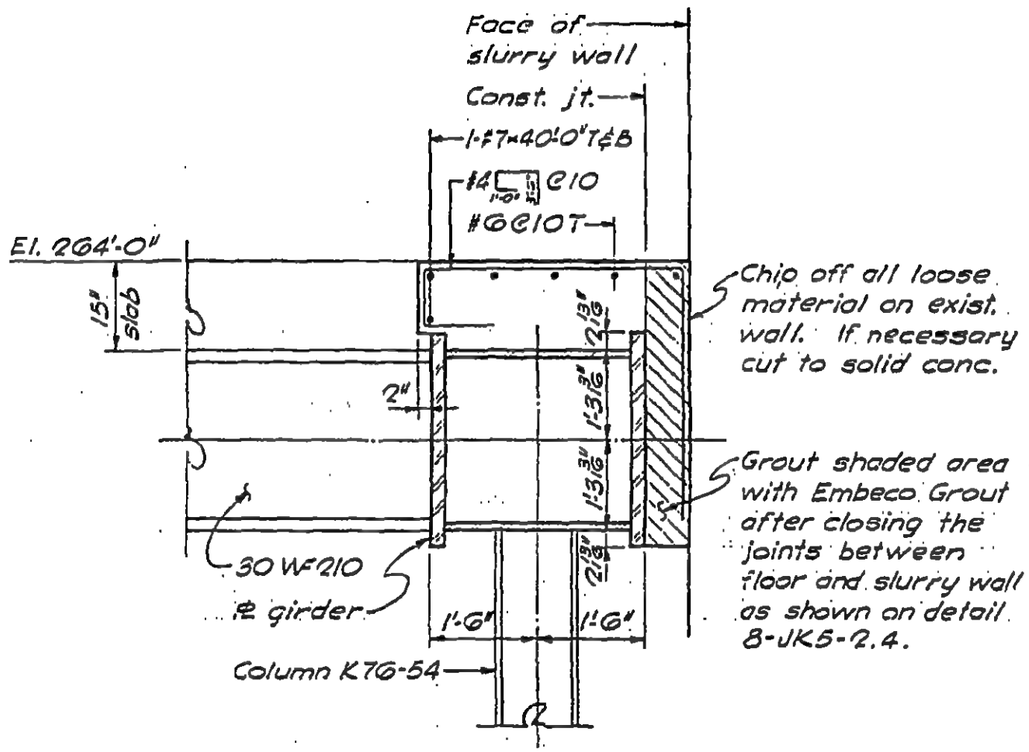

SECTION F-F

(½" = 1'-0")

LICENSED PROFESSIONAL ENGINEER — LESLIE E. ROBERTSON — No. 34360 — UNIVERSITY OF THE STATE OF NEW YORK

DESIGNED

DRAWN G.K.

REVIEWED E.L.

8-JK7-8.3

SKILLING, HELLE, CHRISTIANSEN, ROBERTSON — Structural & Civil Engineers

PROJECT THE WORLD TRADE CENTER | TITLE SECTION AT EL. 264'-0" | DATE 11-5-69

REVISIONS

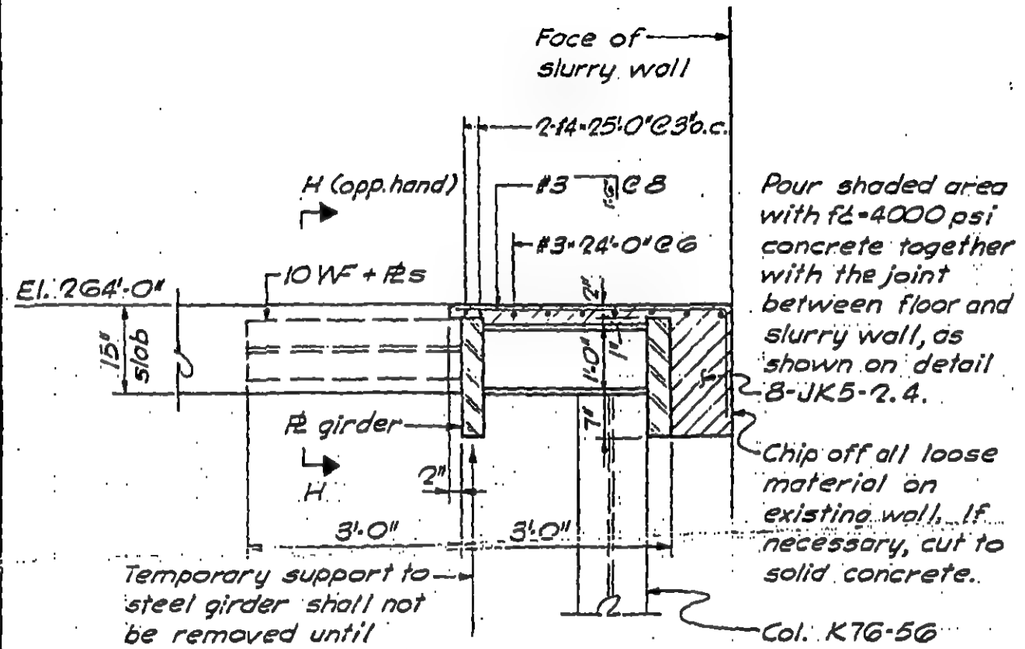

SECTION G-G
(½"=1'-0")

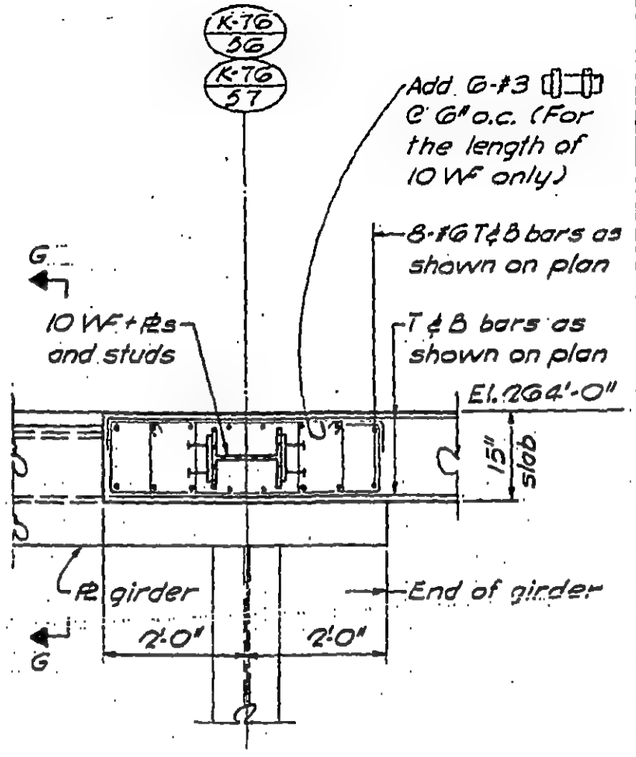

SECTION H-H
(½"=1'-0")

LICENSED PROFESSIONAL ENGINEER
LESLIE E. ROBERTSON
No. 34360
UNIVERSITY OF THE STATE OF NEW YORK

DESIGNED

DRAWN
G.K.

REVIEWED
E.L.

8-JK7-8.4

SKILLING, HELLE, CHRISTIANSEN, ROBERTSON — Structural & Civil Engineers

PROJECT: THE WORLD TRADE CENTER | TITLE: SECTIONS AT EL. 264'-0" | DATE: 2-25-70

REVISIONS

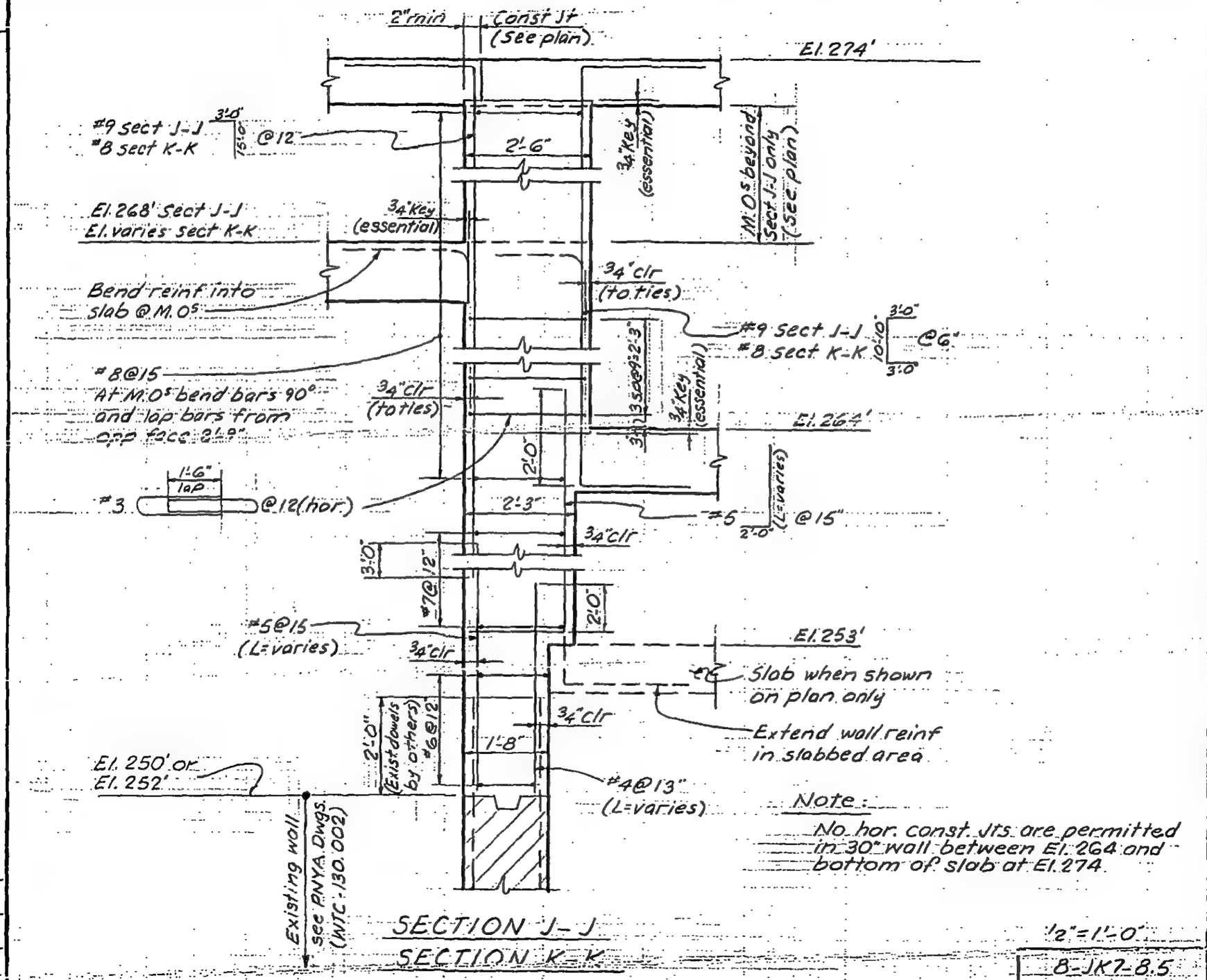

Note:

No hor. const. Jts. are permitted in 30" wall between El. 264 and bottom of slab at El. 274.

SECTION J-J

SECTION K-K

1/2"=1'-0"

8-JK7-8.5

LICENSED PROFESSIONAL ENGINEER — LESLIE E. ROBERTSON — No 34360 — UNIVERSITY OF THE STATE OF NEW YORK

DESIGNED: T. O'NEILL

DRAWN: A. FRANQUI

REVIEWED: E.L.

SKILLING, HELLE, CHRISTIANSEN, ROBERTSON — Structural & Civil Engineers

PROJECT: THE WORLD TRADE CENTER | TITLE: SECTION AT El. 264'-0" | DATE: 2-25-70

REVISIONS

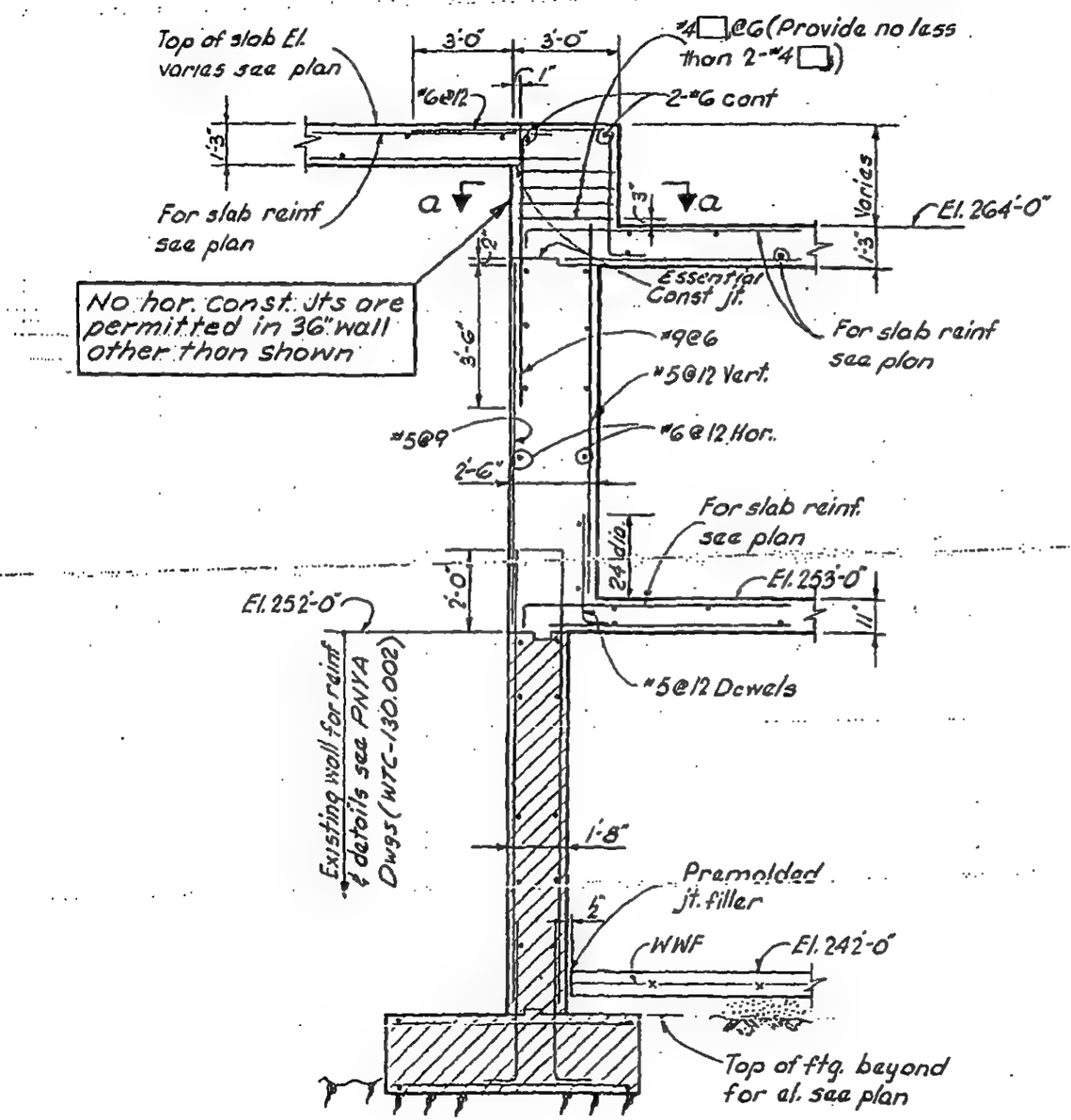

SECTION L-L
(¼" = 1'-0")

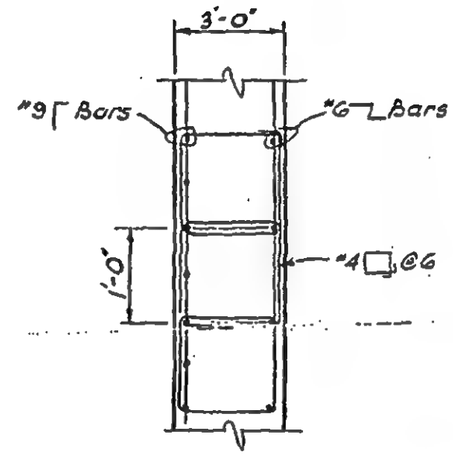

Section a-a

LICENSED PROFESSIONAL ENGINEER
LESLIE E. ROBERTSON
No 34360
UNIVERSITY OF THE STATE OF NEW YORK

DESIGNED: D. Liu
DRAWN: D. Huggins
REVIEWED: E.L.

8-1K7-8.6

SKILLING, HELLE, CHRISTIANSEN, ROBERTSON — Structural & Civil Engineers

PROJECT THE WORLD TRADE CENTER | TITLE SECTION AT El. 264'-0" | DATE 2-25-70

REVISIONS

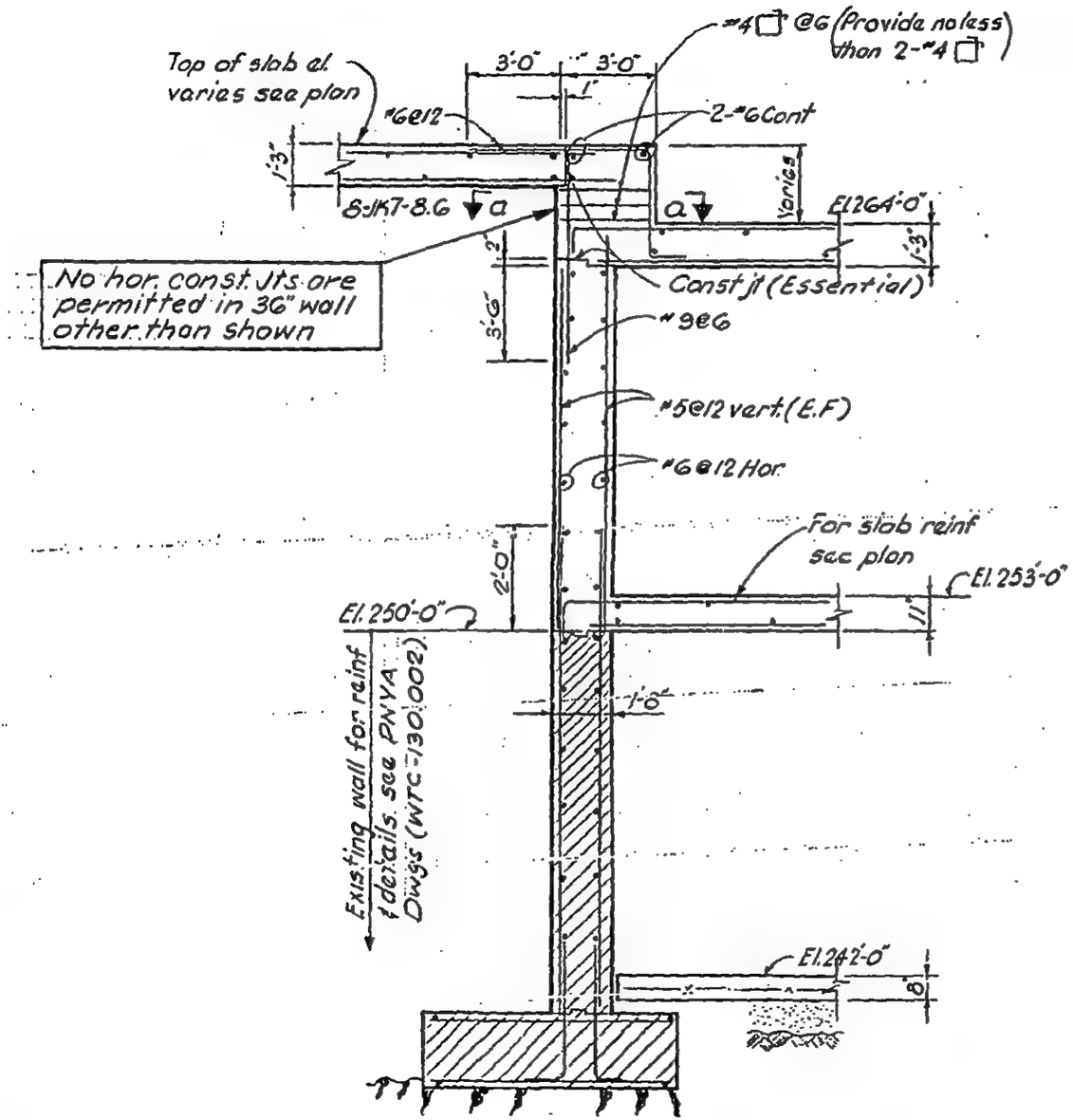

SECTION M-M
(1/4"=1'-0")

LICENSED PROFESSIONAL ENGINEER
LESLIE E. ROBERTSON
No. 34360
UNIVERSITY OF THE STATE OF NEW YORK

DESIGNED D. Liu
DRAWN D. Huggins
REVIEWED E. L.

SKILLING, HELLE, CHRISTIANSEN, ROBERTSON — Structural & Civil Engineers

PROJECT THE WORLD TRADE CENTER | TITLE SECTION AT ELEVATION 264 | DATE 3-12-70

REVISIONS

4-8-70

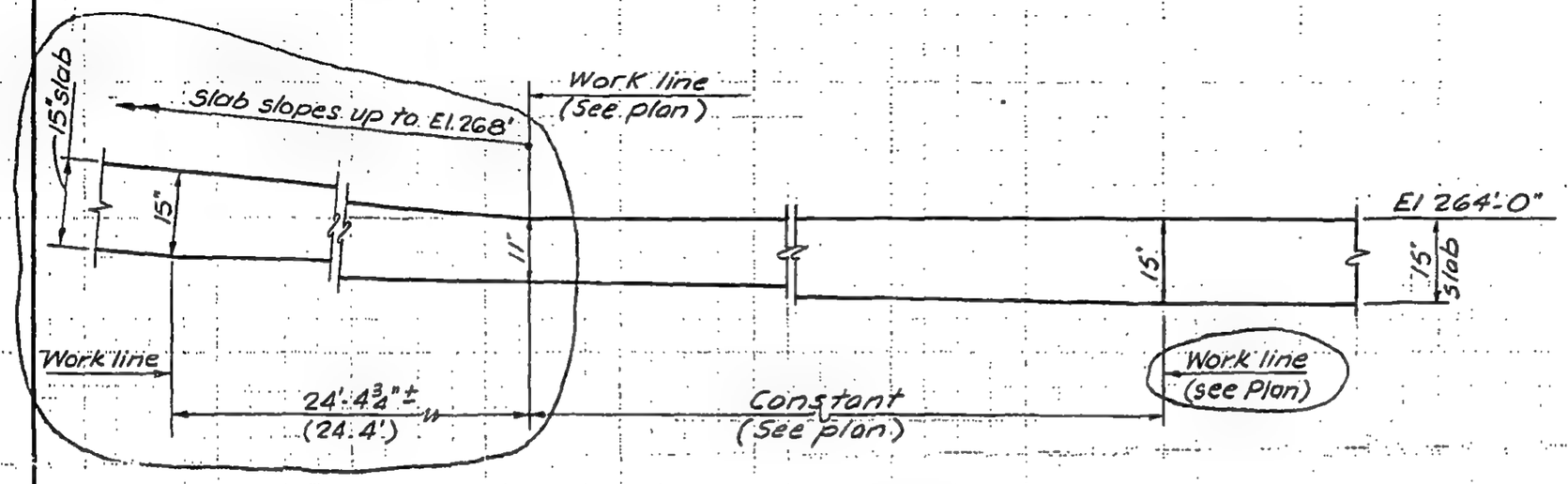

SECTION N-N
(1/2"=1'-0")

LICENSED PROFESSIONAL ENGINEER
LESLIE E. ROBERTSON
No. 34360
UNIVERSITY OF THE STATE OF NEW YORK

DESIGNED

DRAWN A.F.

REVIEWED E.L.

8-JK7-8.8

SKILLING, HELLE, CHRISTIANSEN, ROBERTSON — Structural & Civil Engineers

PROJECT THE WORLD TRADE CENTER | TITLE SECTIONS AT ELEVATION 264' | DATE 3-20-70

REVISIONS

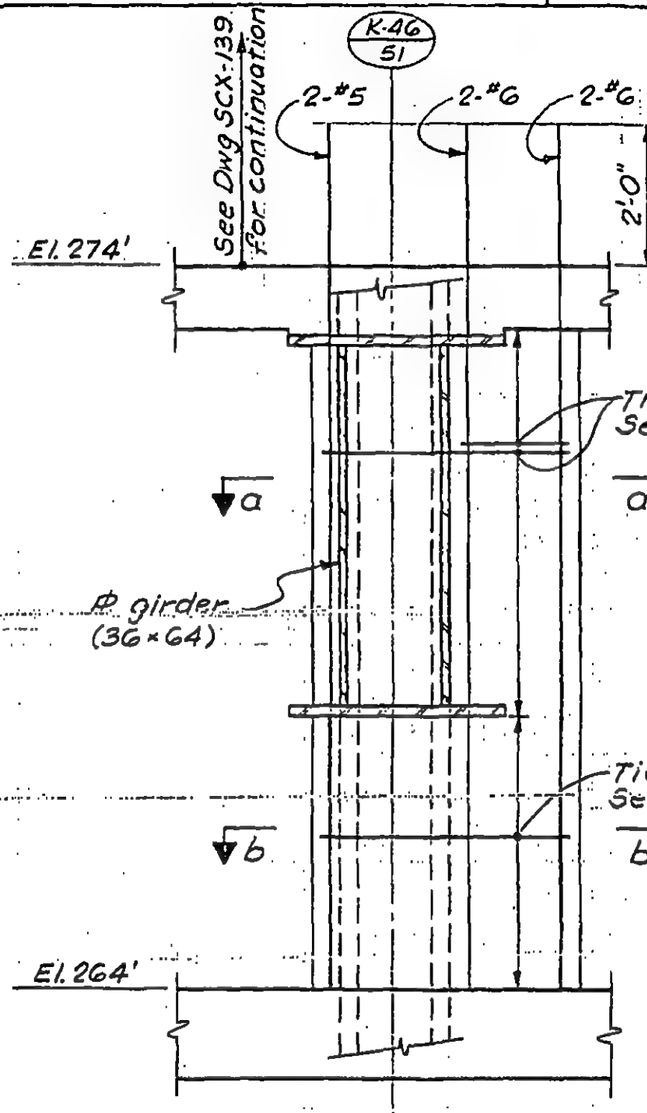

ELEVATION
(Looking towards west)
(½" = 1'-0")

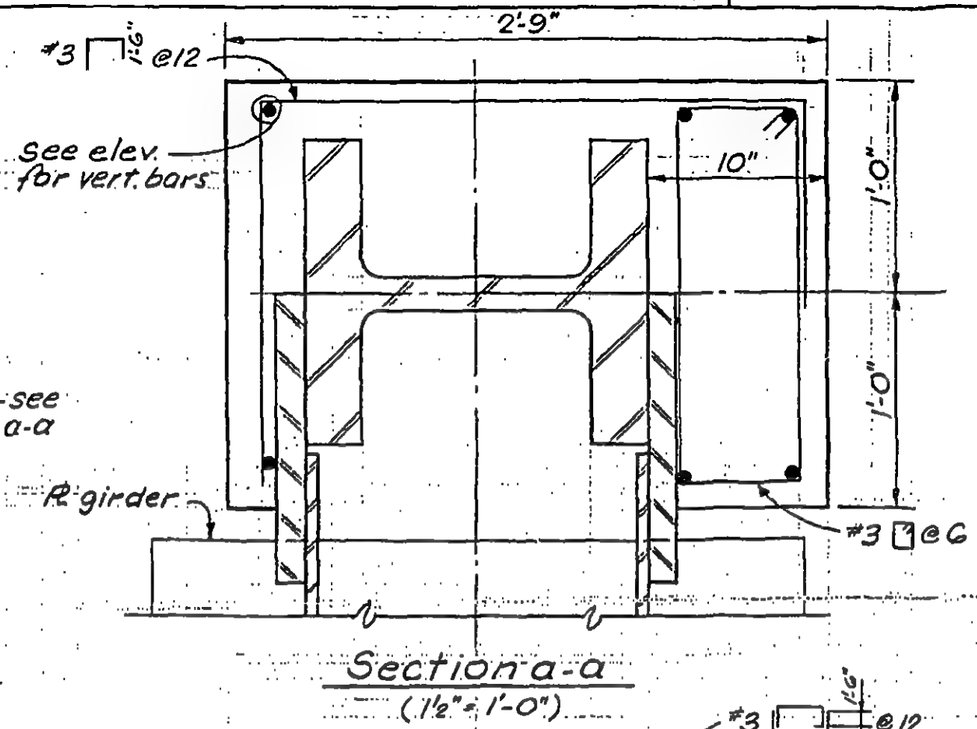

Section a-a
(1½" = 1'-0")

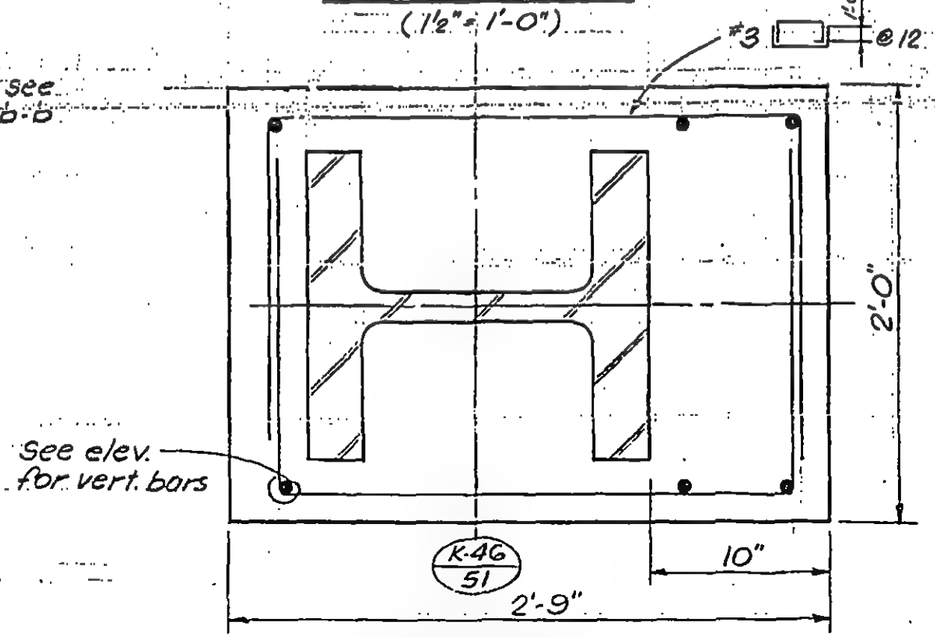

Section b-b
(1½ = 1'-0")

LICENSED PROFESSIONAL ENGINEER LESLIE E. ROBERTSON No 34360 UNIVERSITY OF THE STATE OF NEW YORK

DESIGNED

DRAWN S.C.

CHECKED T.O.

8-JK7-8.9

SKILLING, HELLE, CHRISTIANSEN, ROBERTSON — Structural & Civil Engineers

PROJECT: THE WORLD TRADE CENTER | TITLE: ELEVATOR C9 - SECTIONS | DATE: 4-29-69

REVISIONS
5-26-69
9-29-69
10-8-69
3-31-70

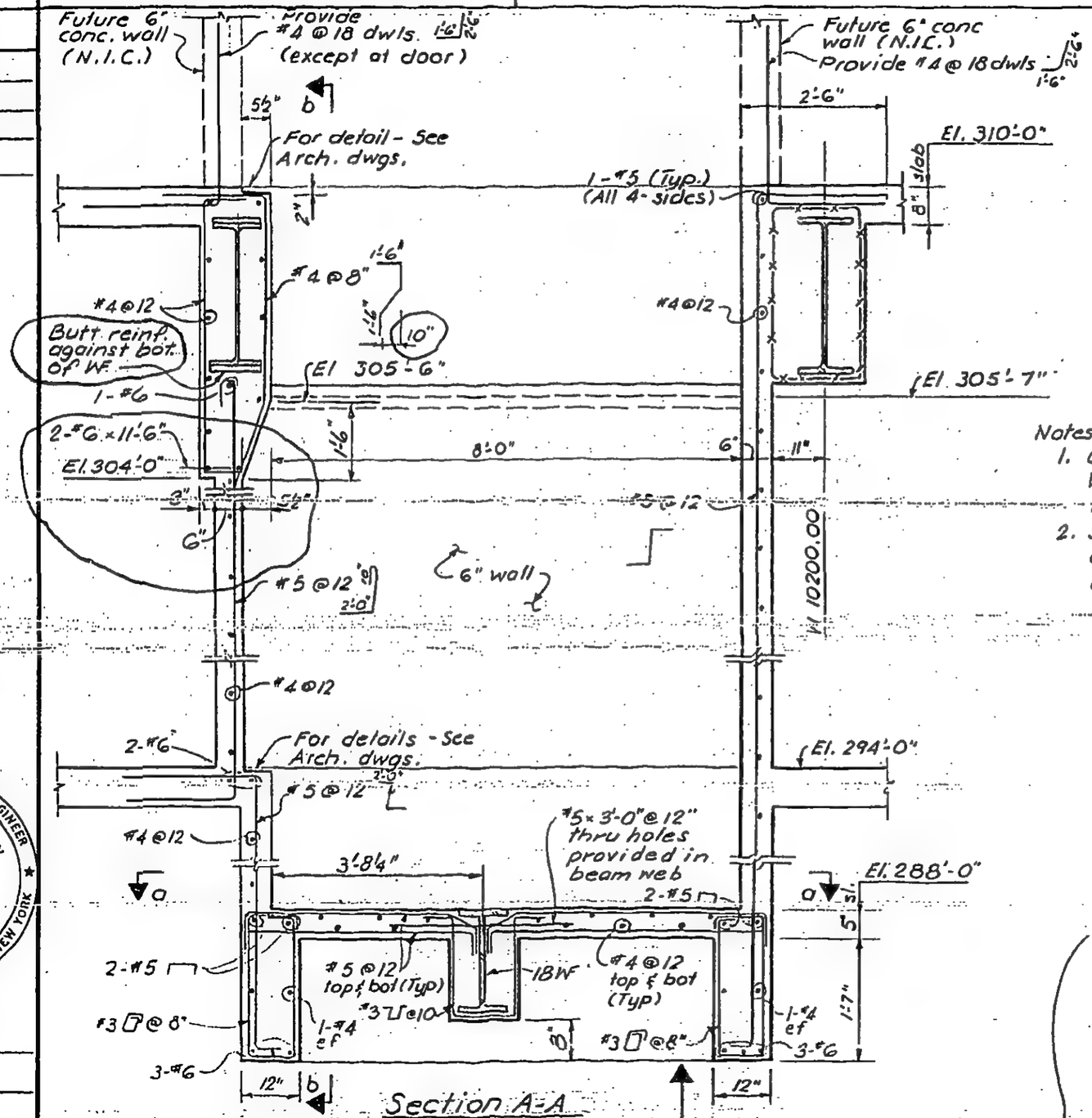

Notes:

1. Concrete to be 3000 psi (normal WT) except slab at el. 310'-0" to be 3000 psi light WT conc.
2. See approved elevator shop drawings for location, shape, and size of inserts in walls.

6" walls between el. 288'-0" and el. 310'-0" are acting as hangers to support slab at el. 294'-0". Therefore all shorings under 6" walls shall not be removed until completion.

LICENSED PROFESSIONAL ENGINEER — LESLIE E. ROBERTSON — No. 34360 — UNIVERSITY OF THE STATE OF NEW YORK

DESIGNED

DRAWN S.C.

REVIEWED E.L.

8-JK7-10.1

SKILLING, HELLE, CHRISTIANSEN, ROBERTSON — Structural & Civil Engineers

PROJECT: THE WORLD TRADE CENTER | TITLE: ELEVATOR C9, SECTIONS | DATE: 4-29-69

REVISIONS
9-29-69
10-8-69

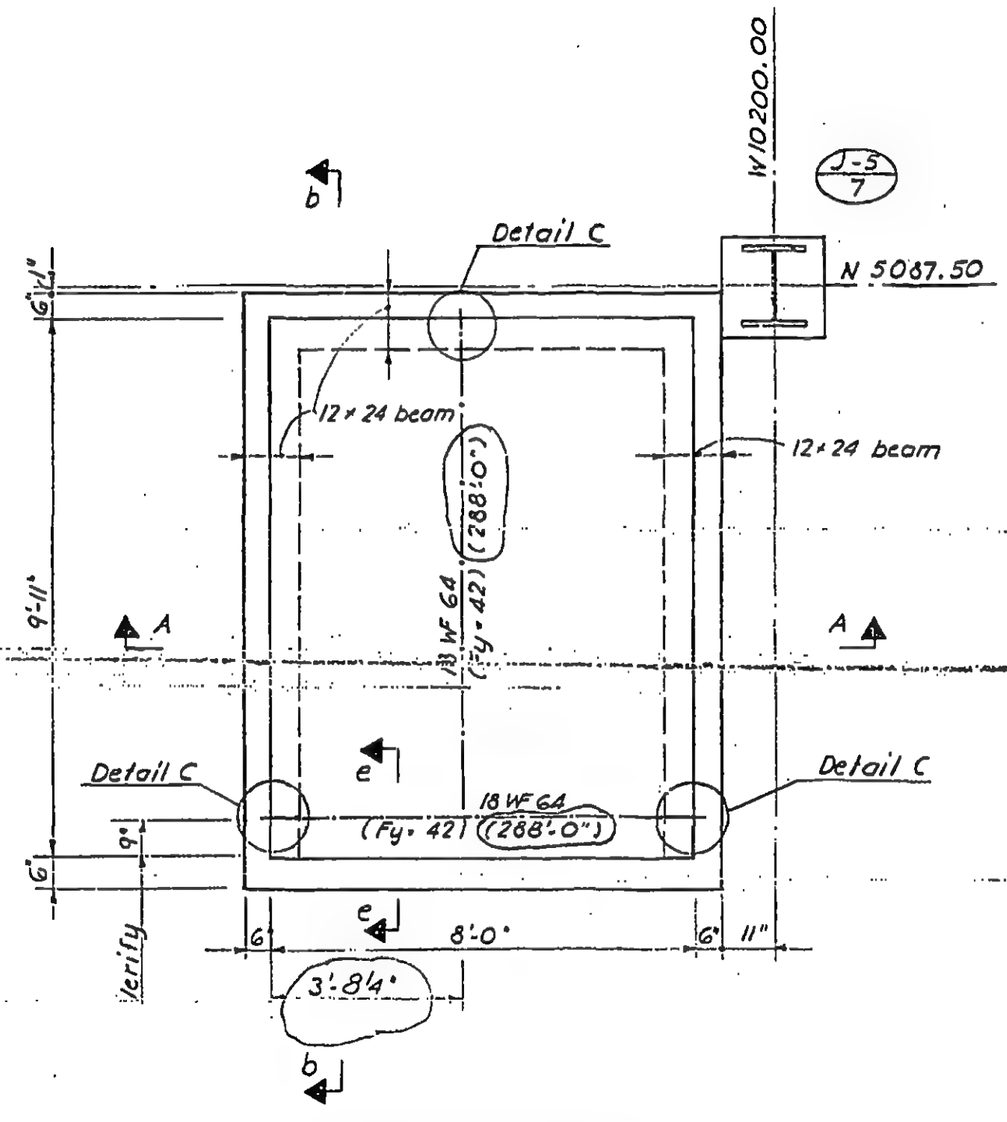

Section a-a
(Plan at El (288'-0"))

LICENSED PROFESSIONAL ENGINEER
LESLIE E. ROBERTSON
No. 34360
UNIVERSITY OF THE STATE OF NEW YORK

DESIGNED
DRAWN F. Smith
REVIEWED E.L.

8-JK7-10.2

SKILLING, HELLE, CHRISTIANSEN, ROBERTSON — Structural & Civil Engineers

PROJECT THE WORLD TRADE CENTER | TITLE ELEVATOR C9 - SECTIONS | DATE 4-29-69

REVISIONS
5-26-69
9-29-69
10-8-69
3-31-70

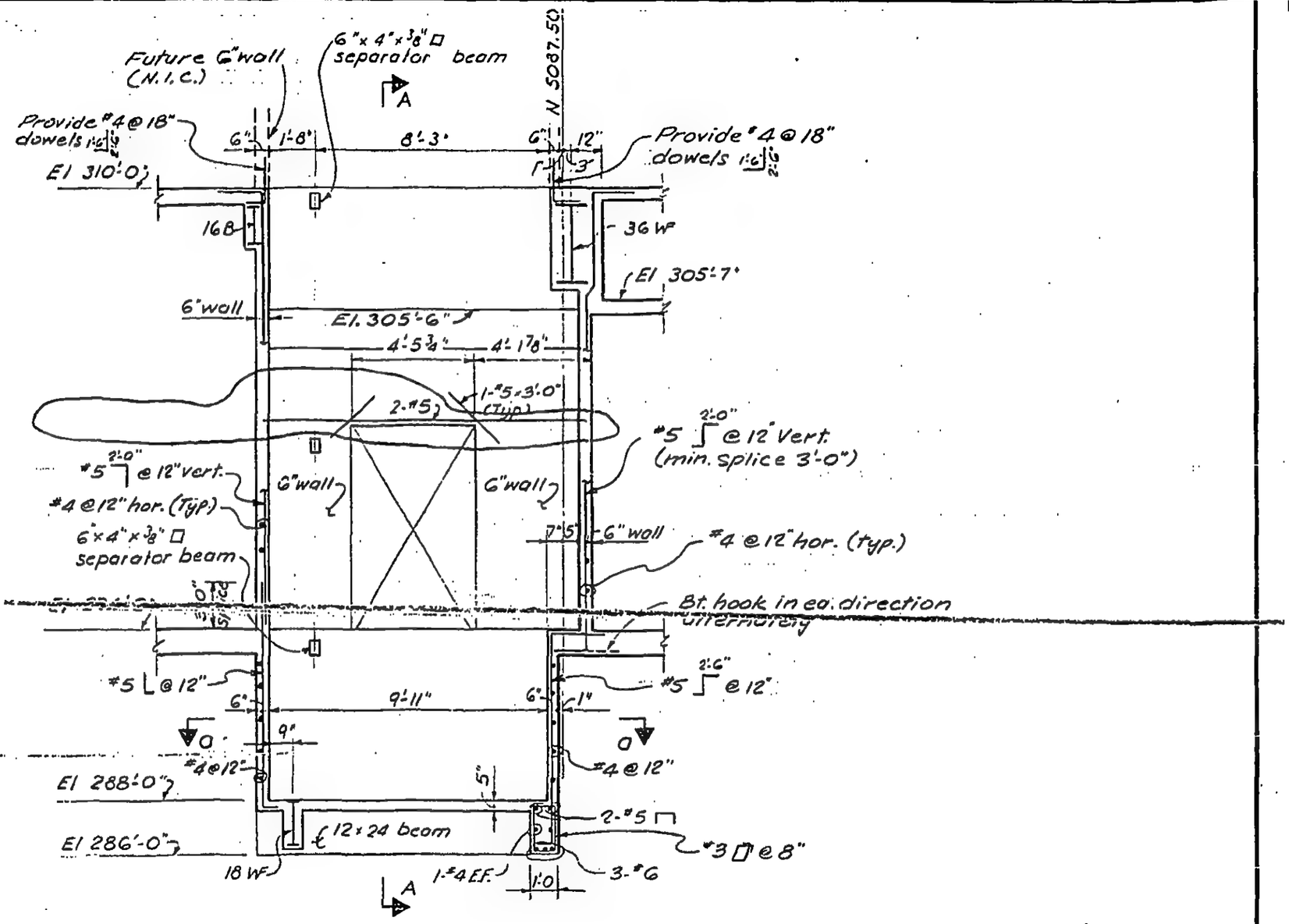

Section b-b

LICENSED PROFESSIONAL ENGINEER — LESLIE E. ROBERTSON JR. — No. 34360 — STATE OF NEW YORK

DESIGNED
DRAWN E. Smith
REVIEWED E.L.

8-JK-7-10.3

SKILLING, HELLE, CHRISTIANSEN, ROBERTSON — Structural & Civil Engineers

PROJECT: THE WORLD TRADE CENTER | TITLE: ELEVATOR C9 - SECTIONS | DATE: 4-29-69

REVISIONS
5-26-69
9-29-69
10-8-69

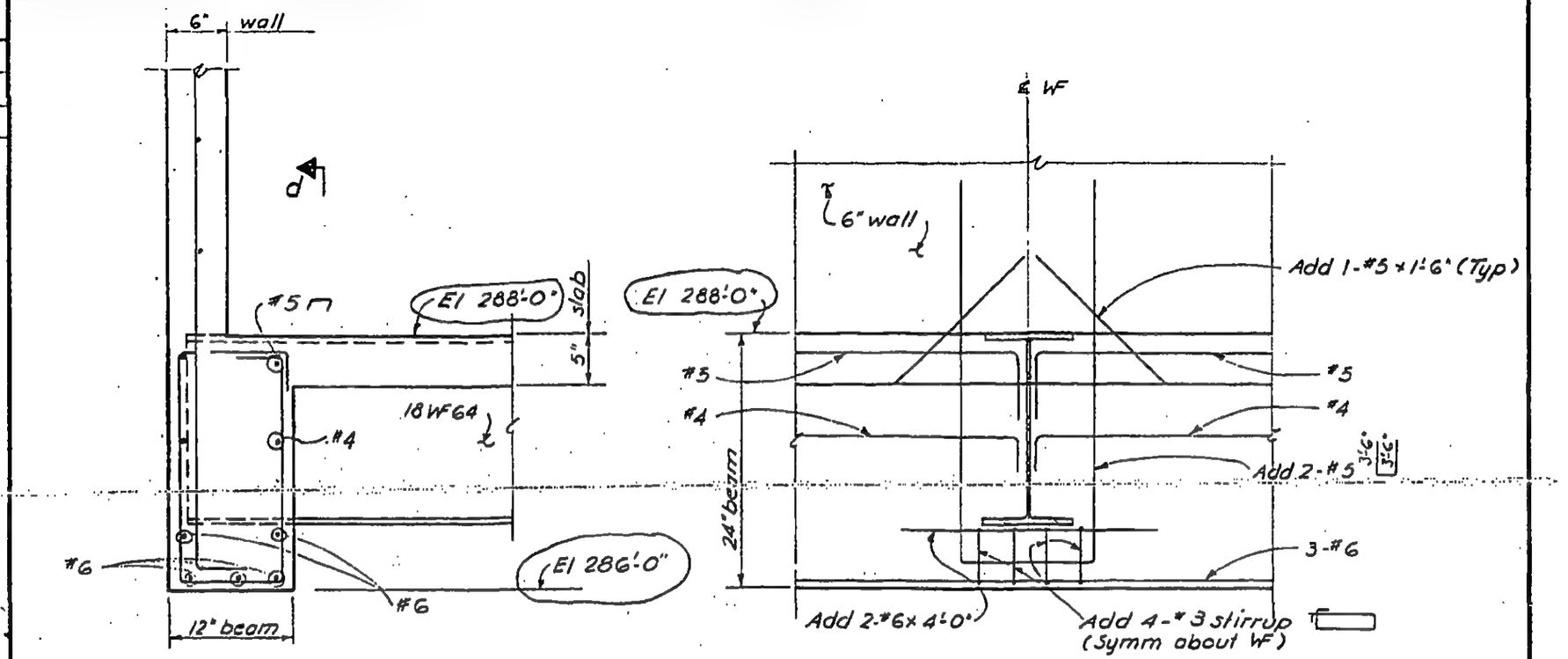

d

Section d-d

Detail C

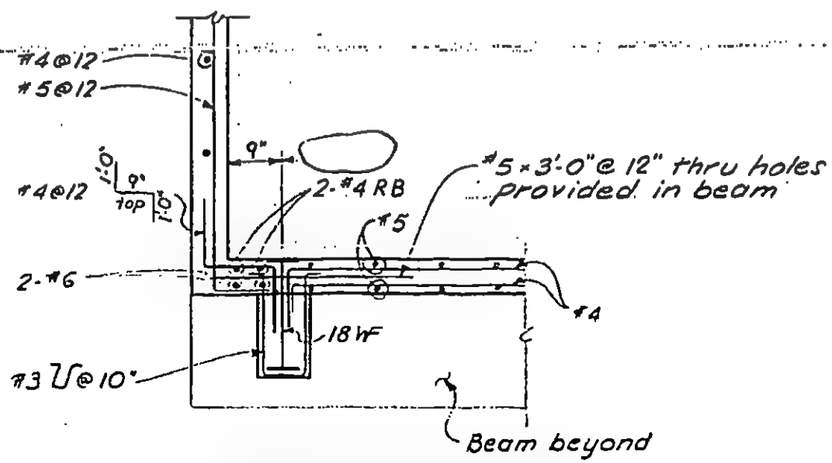

Section e-e

LICENSED PROFESSIONAL ENGINEER
LESLIE E. ROBERTSON
No. 34360
UNIVERSITY OF THE STATE OF NEW YORK

DESIGNED

DRAWN: F. Smith

REVIEWED: E.L.

8-JK7-10.4

SKILLING, HELLE, CHRISTIANSEN, ROBERTSON — Structural & Civil Engineers

PROJECT THE WORLD TRADE CENTER | TITLE ELEVATOR C-10 SECTIONS | DATE 5-29-69

REVISIONS
9-29-69
10-8-69
3-31-70

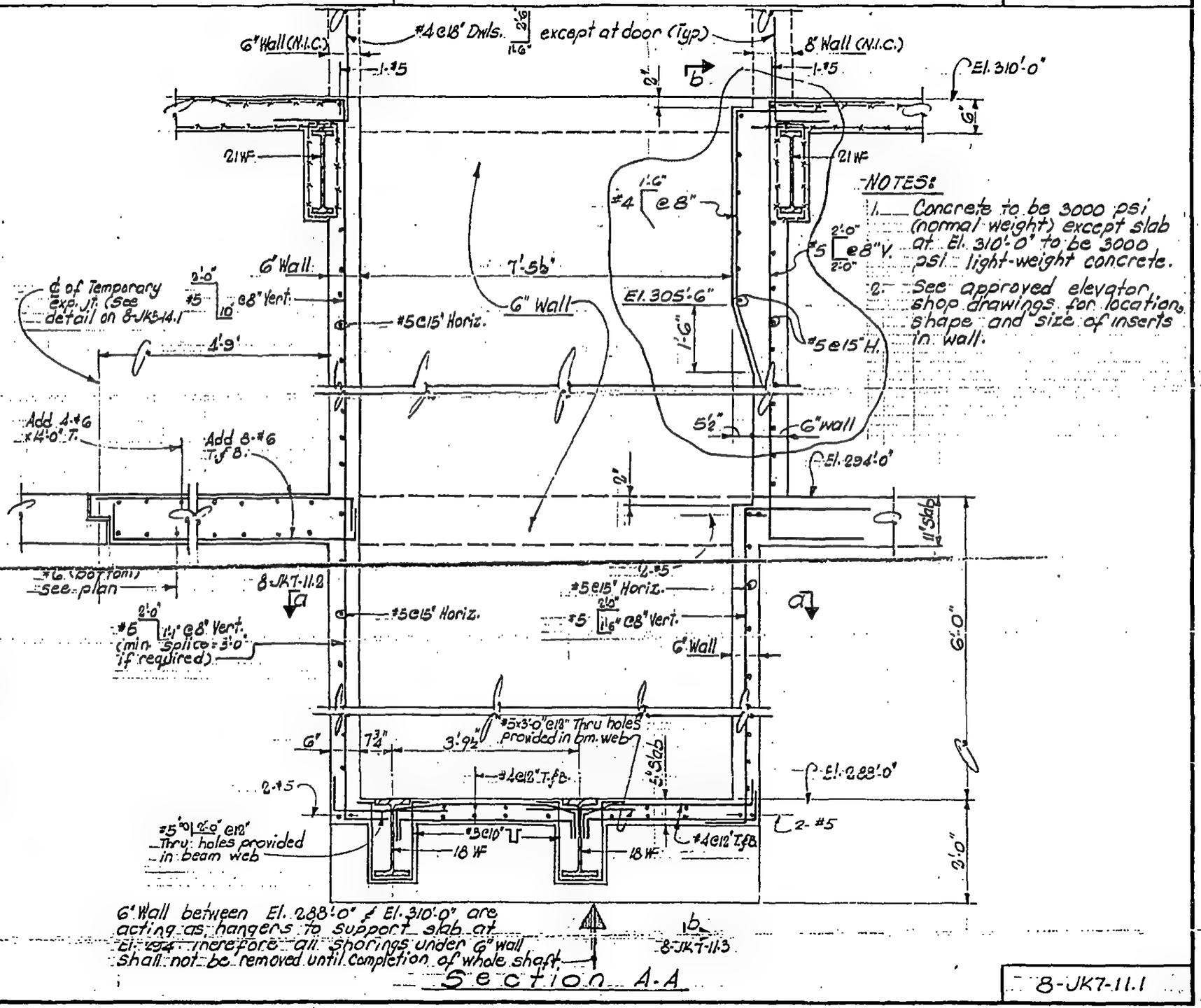

Section A-A

LICENSED PROFESSIONAL ENGINEER — LESLIE E. ROBERTSON — No. 34360 — UNIVERSITY OF THE STATE OF NEW YORK

DESIGNED

DRAWN S.T.M.

REVIEWED E.L.

8-JK7-11.1

SKILLING, HELLE, CHRISTIANSEN, ROBERTSON — Structural & Civil Engineers

PROJECT: THE WORLD TRADE CENTER | TITLE: ELEVATOR C-10 SECTIONS | DATE: 5-29-69

REVISIONS
9-29-69
10-8-69

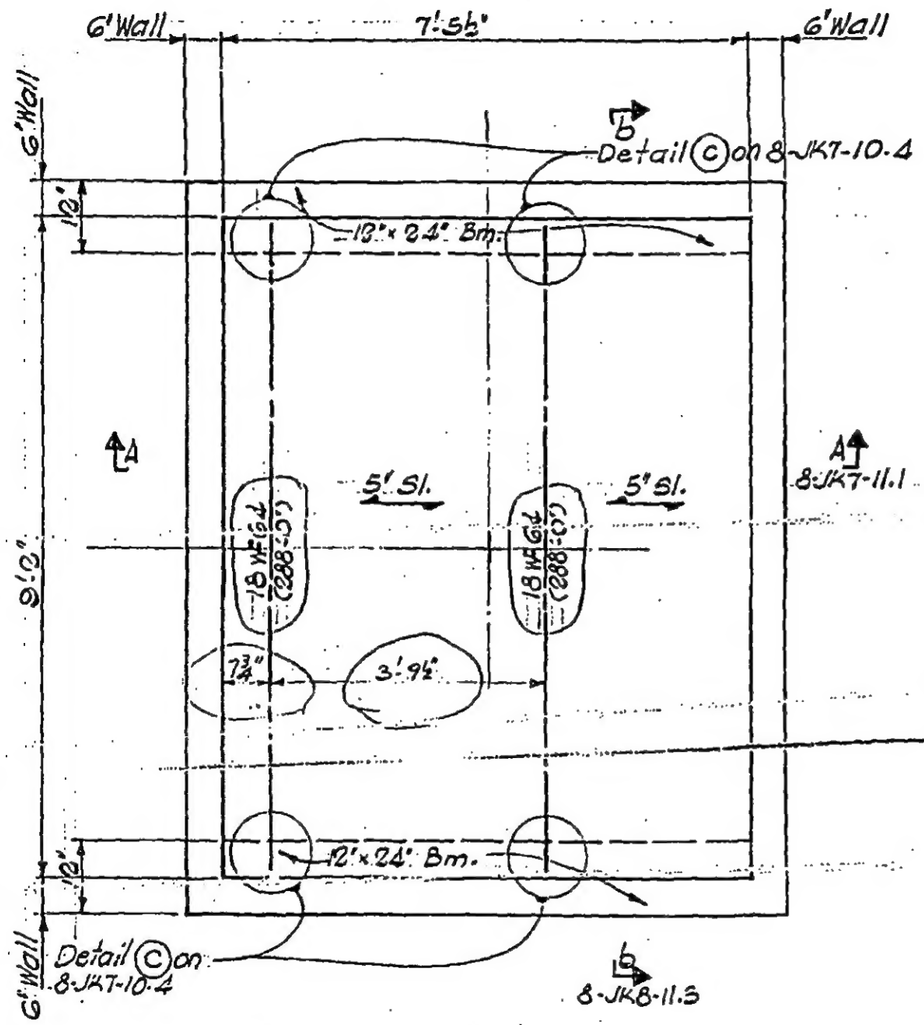

Section a-a
(Plan)

LICENSED PROFESSIONAL ENGINEER
LESLIE E. ROBERTSON
No. 34360
UNIVERSITY OF THE STATE OF NEW YORK

DESIGNED

DRAWN
S.T.M.

REVIEWED
E.L.

SKILLING, HELLE, CHRISTIANSEN, ROBERTSON — Structural & Civil Engineers

PROJECT THE WORLD TRADE CENTER | TITLE ELEVATOR C-10 SECTIONS | DATE 5-29-69

REVISIONS
9-29-69
10-8-69
3-31-70

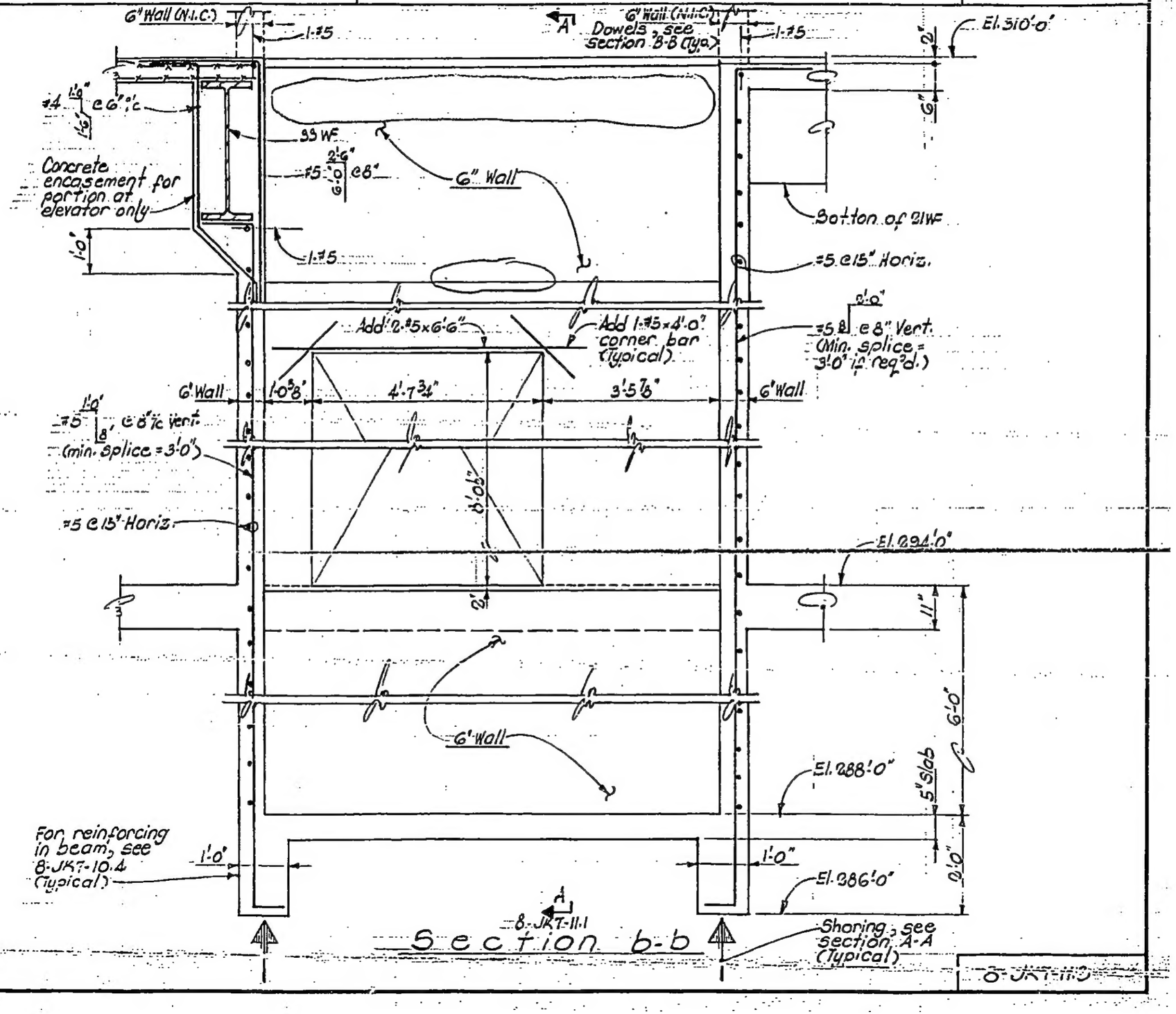

LICENSED PROFESSIONAL ENGINEER — LESLIE E. ROBERTSON — No. 34360 — UNIVERSITY OF THE STATE OF NEW YORK

DESIGNED

DRAWN S.T.M.

REVIEWED E.L.

SKILLING, HELLE, CHRISTIANSEN, ROBERTSON — Structural & Civil Engineers

PROJECT	TITLE	DATE
THE WORLD TRADE CENTER	HOTEL FREIGHT ELEVATOR (H-10) WALLS	5-6-70

REVISIONS

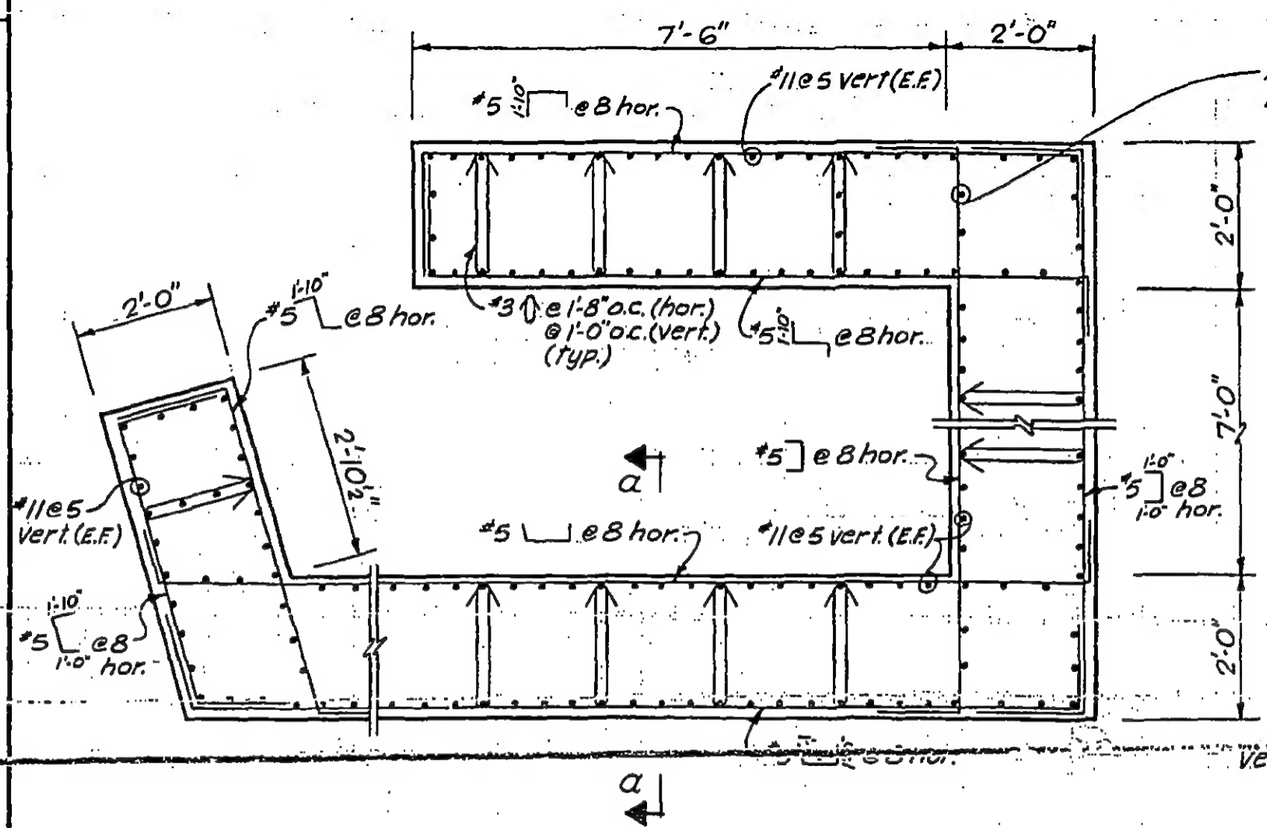

Concrete strength: — f'c = 4000 psi
Ftg. up to El. 284

PLAN
(½" = 1'-0")

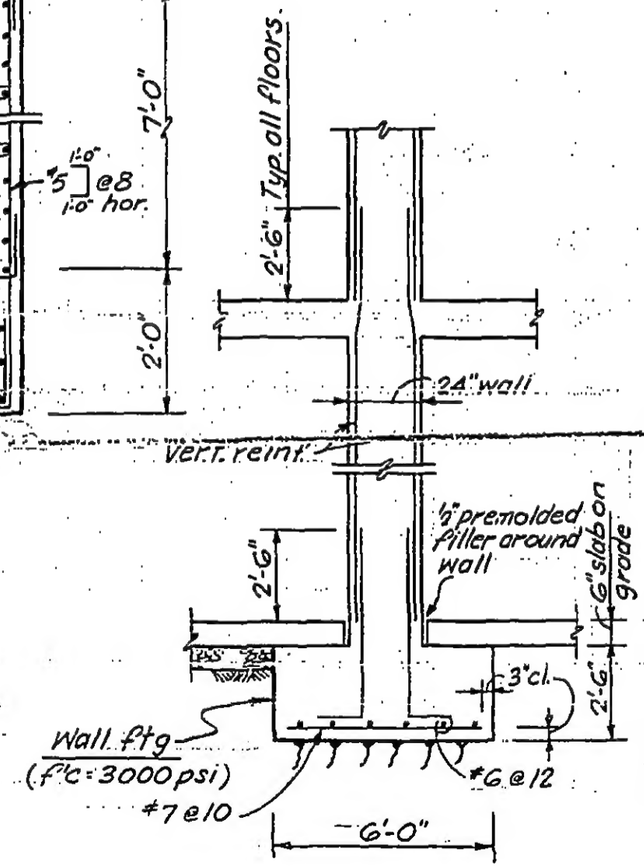

Section a-a
(¼" = 1'-0")

LICENSED PROFESSIONAL ENGINEER — LESLIE E. ROBERTSON — No. 34360 — UNIVERSITY OF THE STATE OF NEW YORK

DESIGNED

DRAWN S.C.

REVIEWED E.L.

8-JK7-12.1

WTCI-1065-LETA